LAFERTGROUP
Member of Sumitomo Drive Technologies

SERVO MOTORS

BRUSHLESS SERVO MOTORS
COMPACT SERVO MOTORS
TORQUE MOTORS

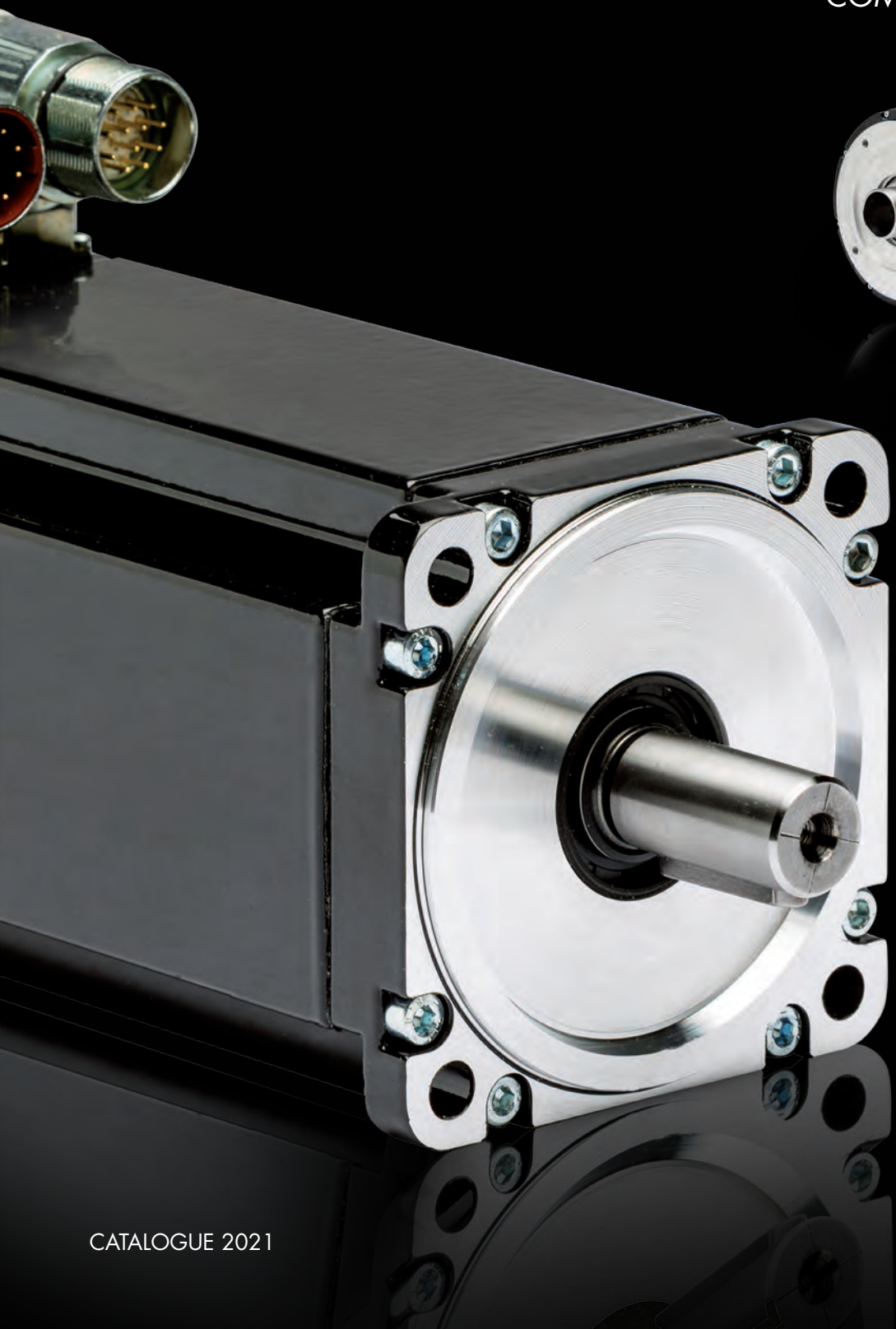

CATALOGUE 2021

Evolving from Lafert to Lafert

Endless integrated solutions

Since inception we have overseen strategic positions and evolved together with the markets. We have led the way in the world of energy efficiency and environmental sustainability. We have always been, and still are, the market leader of product customisation.

"From Lafert to Lafert" represents the evolution that confirms the desire to progress in the wake of our company history which has always resulted in absolute quality.
Now we target an innovative but solid route to give you just what you need, with the flexibility of integrated solutions. This means better understanding the needs of a continually changing market and consequently building a clear path for the future.

For these reasons we are member of the large international industry group Sumitomo Drive Technologies.

LAFERTGROUP
Member of Sumitomo Drive Technologies

Evolving from Lafert to Lafert

Our watchword is "evolution", because we face new challenges every day with a clear vision for constant improvement.

Through company choices, inhouse skills and market demands, we have always been committed to technological innovation that matures over time.

Lafert Group, with 60 years of experience and our partnerships with international players, represents innovation that evolves, does not stop, and continues to adapt "**endless integrated solutions**".

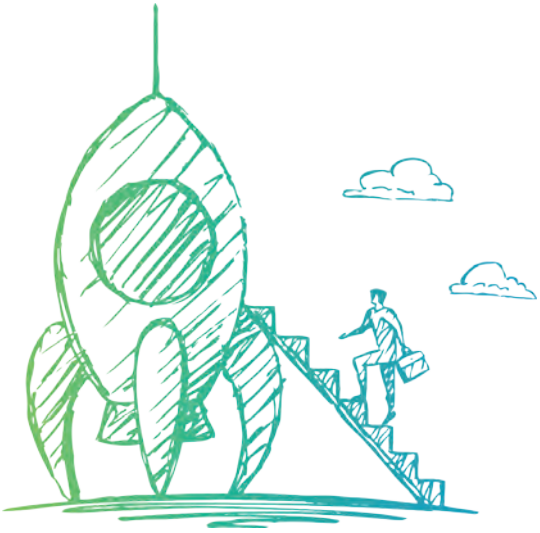

Whatever we do we think big

We are European leaders in the designing and manufacturing of customized electric motors and drives used primarily in the fields of industrial automation, energy saving and renewables.

Each individual company of our group contributes to the success of the organization through their specialized strength in design and production. The combined knowledge of the organization supports the continuous research and development of innovative technologies.

It is a great responsibility that we assume for the world and future generations, an awareness that allows us to understand the future, to think big, and to anticipate the next global needs to **achieve a more efficient and sustainable world.**

144 M€
Sales 2020

156 M€
BDG 2021

879
Employees 2020

+75%
Compared 2011

5% BDG 2021
Yearly investments

+8% year
Commitment
2021-2023

1M units
Motors Production
2020

90
Engineers

The key is technological development

Evolution requires technological development, testing ourselves with global challenges and striving to achieve new energy standards. Since our establishment, we have constantly valued research and development. Thanks to our flexible design and production capabilities, we are able to quickly respond to the global market with new ideas.

The endless future applications of our products ensure that Lafert Group will always evolve and adapt with time. This can be demonstrated by the introduction of permanent magnet technologies, the creation of highly efficient IE4 and IE5 products and the integration between electromechanical technologies.

Our focus on technological innovation is the key to achieving **greater efficiency performance in variable speeds, maximum energy savings and a compact design.**

Our global presence

We offer the highest flexibility in design and operate across **thirteen locations in Europe, North America, Asia and Australia.** Our 6 production units work closely to coordinate the integration of production processes. This allows us to offer customized technological solutions to meet market demands.

Since 2018 we have been member of the large international group **Sumitomo**. Thanks to the ambitious investment plan, organizational strengthening, and complementary internal production capabilities, many business opportunities have already developed and will continue to grow in the near future.

We have created a powerful claim, a statement that sets a long-term goal and represents the ideal to which we aim to.

Shaping the future together

Sumitomo Drive Technologies
LAFERTGROUP
Invertek Drives.com

RANGE OF PRODUCTS
(2020)

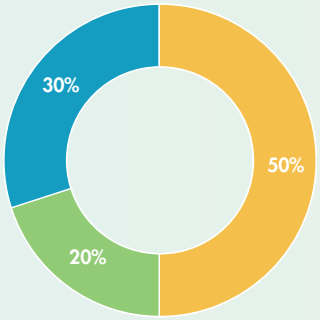

- ASYNCHRONOUS MOTORS
- SYNCHRONOUS MOTORS & DRIVES
- BRUSHLESS SERVO MOTORS & DRIVES

FIELDS OF APPLICATION
(2020)

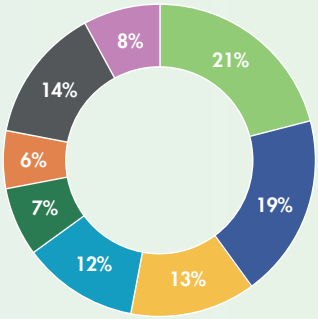

- HVAC/R
- INDUSTRIAL MACHINERY
- AIR PROCESSING
- WIND ENERGY
- ROBOTICS
- MATERIAL HANDLING / AGV
- SYSTEMS INTEGRATORS
- DISTRIBUTION

BUSINESS PRESENCE
(2020)

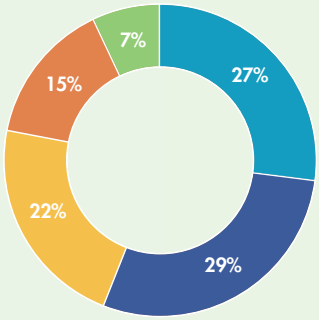

- ITALY
- GERMAN SPEAKING COUNTRIES
- REST OF EUROPE
- NORTH AMERICA
- REST OF THE WORLD

CONTENTS

GENERAL INFORMATION

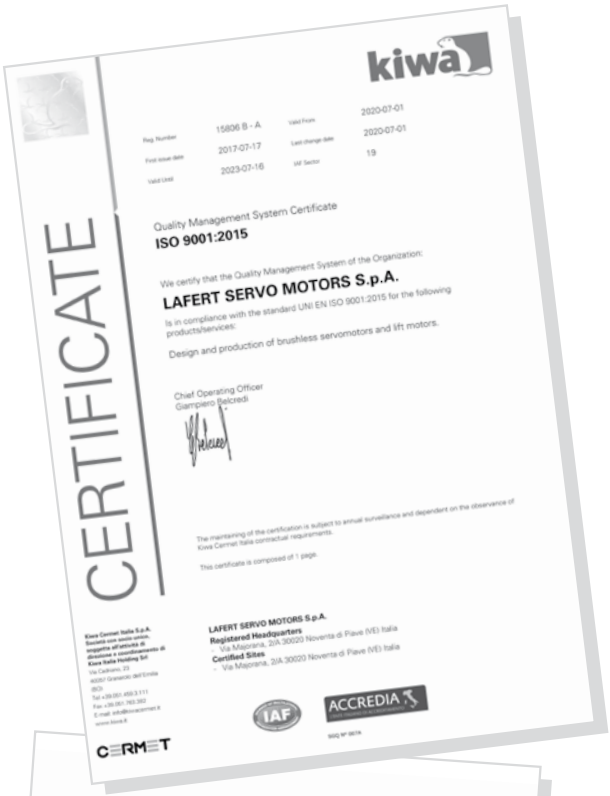

kiwa

CERTIFICATE

Reg. Number 15806 B - A
First issue date 2017-07-17
Valid Until 2023-07-16
Valid From 2020-07-01
Last change date 2020-07-01
IAF Sector 19

Quality Management System Certificate
ISO 9001:2015

We certify that the Quality Management System of the Organization:
LAFERT SERVO MOTORS S.p.A.
Is in compliance with the standard UNI EN ISO 9001:2015 for the following products/services:
Design and production of brushless servomotors and lift motors.

Chief Operating Officer
Giampiero Balcredi

The maintaining of the certification is subject to annual surveillance and dependent on the observance of Kiwa Cermet Italia contractual requirements.

This certificate is composed of 1 page.

Kiwa Cermet Italia S.p.A.
Società con socio unico soggetta all'attività di direzione e coordinamento di Kiwa Italia Holding Srl
Via Cadriano, 23
40057 Granarolo dell'Emilia
BO
Tel +39 051.4503111
Fax +39 051.765.202
E-mail info@kiwacermet.it
www.kiwa.it

LAFERT SERVO MOTORS S.p.A.
Registered Headquarters
- Via Majorana, 2/A 30020 Noventa di Piave (VE) Italia
Certified Sites
- Via Majorana, 2/A 30020 Noventa di Piave (VE) Italia

IAF
ACCREDIA
MSQ N° 0074

CERMET

LAFERTSERVO

EU Declaration of Conformity

The manufacturer:
LAFERT SERVO MOTORS S.p.A.
Via Majorana, 2/A – I30020 - Noventa di Piave, Venezia, Italy
Phone +39(0)421.572.211 – Fax +39(0)421.225.858
info.servomotors@lafert.com www.lafert.com

declares under its sole responsibility that:

LAFERT
Brushless Servomotors

Models / Types:
D, I, J, K, P, Q, S, Y, Z,
8LC, 8LM, 8LP, 8LS, 8LT, 8LV, DMS
and spindle motors type V

when installed, maintained and used in applications for which they were designed, and in compliance with the relevant installation standards and manufacturer's instructions, including Lafert's safety, service and operating instructions available on the website www.lafert.com, comply with the provisions of the following relevant European Union harmonization legislation, wherever applicable:

LVD Directive 2014/35/EU
EMC Directive 2014/30/EU
Eco-Design Directive 2009/125/EC (*)
RoHS Directive 2011/65/EU
Machine Directive 2006/42/EC

The fulfillment of the safety objectives of the relevant European Union harmonization legislation has been demonstrated by compliance with the following standards, wherever applicable:

EN 60034-1:2010+AC:2010, EN 60034-5:2001+A1:2007, EN 60034-6:1993, EN 60034-7:1993+A1:2001, EN 60034-8:2007+A1:2014, EN 60034-9:2005+A1:2007, EN 60034-11:2004, EN 60034-14:2004+A1:2007 and EN 60204-1:2006+A1:2009+AC:2010

CE marking applied since 1995

Declarations of incorporation:

The products above cannot be put into service until the machinery into which they have been incorporated has been declared in conformity with such Directives.

(*) best practices as well as the state of the art technologies have been considered in the motors design. Recycling disposals have been also included in the Brushless Servomotors's Operating Instructions, available on the website www.lafert.com

In response to a reasoned request by the national authorities, we undertake to transmit relevant information on the partly completed machinery identified above through Lafert's authorized representative established in the European Union. Transmission shall be in digital or physical format, without prejudice to the intellectual property rights of the manufacturer.

Signed for and on behalf of the manufacturer:

Roberto Trevisan
Engineering

Andrea Scotton
Quality Assurance

12th edition: 2018, September 06th

LAFERTGROUP

QUALITY SYSTEM CERTIFICATE

The strictness of our quality control assures the flawless operation and reliability of our products. Our quality is confirmed by the **Certificate ISO 9001:2015** awarded by CERMET, a certification body authorized by ACCREDIA.

SAFETY STANDARDS

Our motors comply with the requirements of the International Standard **IEC 60034** for rotating electrical machines as well as with the following European Directives: **Low Voltage Directive** (LV) 2014/35/EC, **Electromagnetic Compatibility Directive** (EMC) 2014/30/EC and **RoHS Directive** 2011/65/EC on the restriction of hazardous substances in electrical and electronic equipment.

All products comply with the requirements of the **Directive Machines** (MD) 2006/42/EC. In accordance with this Directive, induction motors are components and intended solely for integration into other machines. Commissioning is forbidden until conformity of the end-product with this Directive is proved.

CE

The CE marking was applied for the first time in 1995.

When operating the motor, the observance of the Regulation EN 60204-1 and safety instructions indicated in our Operating Instructions must be complied with.

UK CA

Motors complied with all applicable UK legislative requirements (UK Conformity Assessed).

Furthermore all servomotors can be manufactured according to the following standard:

UL 1004 - Electric Motors and **CSA C22.2 No 100 - Motors and Generators**

So the mark **cURus** applies to the whole series.

Explosive Atmospheres Directive (ATEX) 2014/34/EU, concerning equipment and protective system intended for use in potentially explosive atmospheres, in compliance with standard EN IEC 60079-0:2018, EN IEC 60079-7:2015/A1:2018, EN 60079/31:2014.

The marking shall include the following:
II 3G Ex nA IIC T155°C (T3) Gc
II 3D Ex tc IIIC T135°C Dc

(A dedicated brochure is available)

STANDARDS AND REGULATIONS

Motors comply with the relevant standards and regulations as indicated in the table below:

ELECTRICAL	General stipulations for electrical machines	IEC 60034-1
	Terminal markings and direction of rotation of rotating electrical machines	IEC 60034-8
	Selection of energy-efficient motors including variable speed applications-application guide	IEC/TS 60034-31
	Thermal evaluation and classification of electrical insulation - Insulating materials	IEC 60085
MECHANICAL	Dimensions and output series for rotating electrical machines IM B3 shape	IEC 60072-1
	Dimensions and output series for rotating electrical machines IM B5 shape	IEC 60072
	Cylindrical shaft ends for electric motors	IEC 60072
	Classification of protection degree (IP code)	IEC 60034-5
	Methods of cooling	IEC 60034-6
	Mounting arrangements - IM code	IEC 60034-7
	Mechanical vibration - measurements evaluations and limits of vibrations	IEC 60034-14
	Tolerances	DIN 42948
	Tolerances of mounting and shaft extensions	DIN 42955
	Classifications of environmental conditions	IEC 60721-2-1
	Mechanical vibration and shock (Balancing)	ISO 8821

TOLERANCES

MECHANICAL TOLERANCES

Mechanical dimensions of electric motors are indicated in the regulation **IEC 60072-1** that also sets out admissible tolerances, see the table below:

Values for	Tolerance	Tolerance compared to rated values
Diameter of the shaft end	from 8 up to 30 mm from 32 up to 48 mm from 55 up to 100 mm	j6 or k6 or h6 k6 m6
Feather key width	/	h9
Flange pilot	/	j6 or h7

Note: The threaded holes at the shaft ends conform to the regulation DIN 332-D

ELECTRICAL TOLERANCES

Values for	Tolerance compared to rated values
Stall current (measurement in S1 duty cycle at rated speed with $\vartheta_{amb} \leq 40$ °C and altitude ≤1000 m above sea level).	Io +/- 5%
Rated current with rated torque and revolutions (measurement in S1 duty cycle at rated speed with $\vartheta_{amb} \leq 40$ °C and altitude ≤1000 m above sea level).	In +/- 5%
Back electromotive force: Bemf	Bemf +/- 5%

ϑ_{amb} = Ambient temperature

DERATING TABLES

The following derating tables with cumulative coefficients are provided for guidance. Ktot = Ktemp*Khigh*Kduty, according to different operating conditions, ambient temperature higher than 40 °C, altitude higher than 1000 m above sea level or duty cycles with overload.

Depending on application and ambient conditions, the temperature limit of the transducer could affect the motor performances.Drive parameter setting so as switching frequency lower than 10 kHz and bus voltage higher than 566 VDC could affect the motor performances.

DERATING ACCORDING TO ALTITUDE

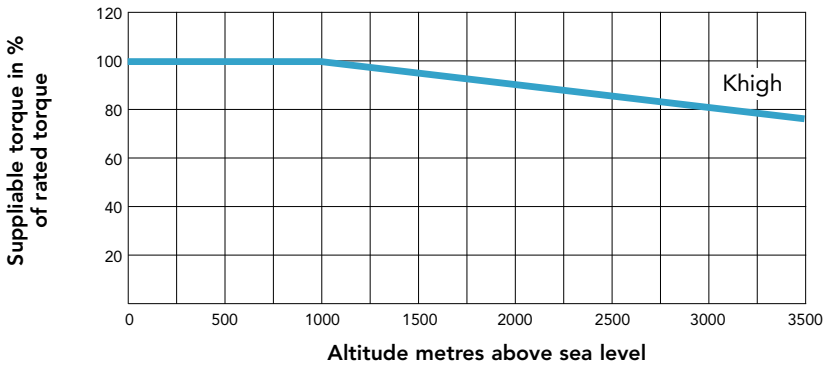

Fig. 1

DERATING ACCORDING TO AMBIENT TEMPERATURE

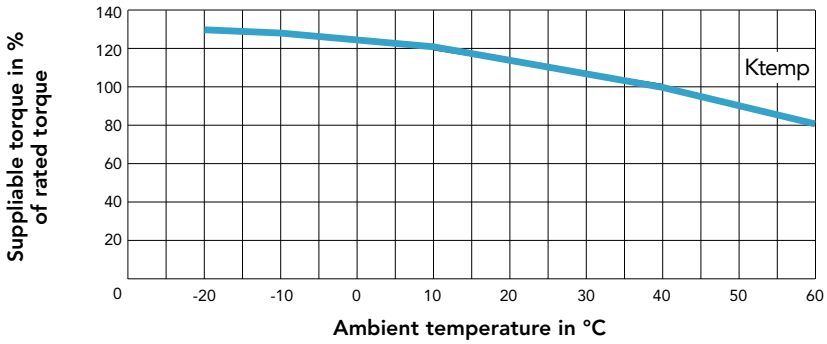

Fig. 2

SUPPLIABLE TORQUE ACCORDING TO A DUTY CYCLE

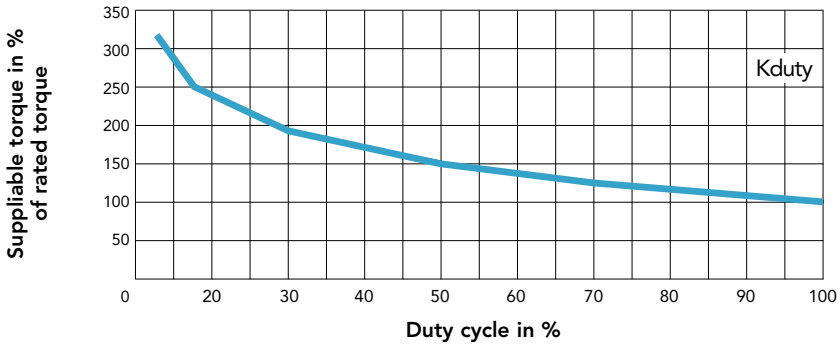

Fig. 3

SERVO SYSTEM

The **permanent magnet synchronous servomotor** along with the relative electronic drive, represents a servo system suitable for driving a shaft at high performance, particularly when dynamic control during transients or steady state stability is required. In general, they assure higher bandwidths than other motor types due to their compact design giving a high ratio of torque/inertia. They need no brushes, as their name suggests, unlike a DC motor. This gives high performance for limited dimensions, excellent reliability and reduced maintenance procedures.

Brushless servomotors are used in a wide range of operating fields, chosen for their ability to operate with an almost constant torque and withstanding overloads several times higher than rated current.

Servomotor performance is linked to the **electronic drive** that supplies them controlling stator phase switching thus substituting the commutator of the old DC machines. In the brushless servomotor currents are distributed to windings through power static switches (for example, IGBT, MOSFET) according to the position detected by means of an angular position transducer, such as resolver, encoder or Hall sensor. The power bridge along with the feedback element replaces the commutator of the old DC machines. The feature maintained in common with a DC motor is constant torque up to rated speed.

APPLICATIONS

- Numerical control shaft drive
- Intermittent motion controls
- Controls according to complex motion laws
- Machine tools for metals, wood and other material manufacturing (in general, chip forming machining)
- Textile machines
- Graphic and serigraphic machines
- Machines for ceramics industry
- Machines for packing industry
- Plastic moulding machines
- Winding and unwinding machines
- Vehicles supplied by batteries for material transport and movement
- Press supply
- Robotics and manipulation
- Transfer lines
- Paper factories

COMPONENTS

Three-phase synchronous permanent magnet servomotors are made up of the following main components:

Stator, with low-loss Fe-Si core lamination stack and three-phase star connection winding; insulation class F (for temperature rise of ΔT=105°K and ambient temperature of +40°C). Optionally available curus compliant insulation system.

Rotor, characterized by low-loss Fe-Si core lamination stack and peripheral surface with rare earth permanent magnets; the shaft is made of Ni-Cr steel; bearing have permanent lubrication.

Frame components, such as die-cast flange, endshield and cover, and extruded aluminium case.

Rotor position detector, whose adjustment responds to specific rules. Available in different types:
- Phase control and **monitoring** of motor revolution speed **with a Resolver**, (2-pole standard version, available with 4 and 6 poles) combinable with other feedback options.
- **Monitoring** of angular position and motor rotation speed **with an Encoder** combinable with other feedback options.
Note: it is also available with a sinusoidal encoder and a RS485 interface.
- AC (standard) brushless tacho-generator for monitoring motor rotation speed, equipped with three-phase winding (table "Tachometric transducer") combinable with other feedback options.
- **Hall-effect sensors** with high thermal stability and high magnetic sensitivity: They allow monitoring of the rotor position for the correct piloting of the power bridge combinable with other feedback options.

Thermal sensor placed into stator winding in order to protect motor temperature. Different sensors type is also available on request.

Connections with the drive for both power and signals with connectors in all series.

Failsafe holding brake (optional) to be fitted in the flanged endshield, equipped with permanent magnets and electromagnetic release.

BRIEF DESCRIPTION

The following features of our standard motors may vary depending on series and type:

- Admissible environmental temperature: from -15 °C up to +40 °C, with altitudes 1000 m above sea level
- Mounting: IM B5 (V1 and V3 available)
- Flange concentricity degree "N"; balancing: vibration "N"; dynamic balancing with half key
- Shaft designed according to the standard version with key (also available without key)
- Available stall toque: from 0.18 Nm up to 390 Nm
- Available speeds: 300 to 6000 rpm
- Drive operating voltage: 400 Vac
- Pole number according to the series: 6, 8, 10 poles
- Insulation class: "F"; cooling through radiation and natural convection
- IP65 degree of protection for the whole range (IP67 optional); B28 is designed with IP65 protection as well except for the flange end
- On-Off PTO switch for thermal protection tripping at 140 °C (not included in B20Q), NTC and PTC are available
- Optional feedback by choice: resolver, encoder (several combinations may be added to this list)
- High acceleration and deceleration: up to 160.000 rad/sec2
- Reduced dimensions
- Rare earth permanent magnets
- Excellent distribution of the rotor magnetic field, in order to eliminate torque fluctuations at low speed.

DEFINITIONS

Stall torque (Mo): Torque available on the shaft continuously (service S1) with speed close to zero (lower than 200 rpm) and with a winding current equivalent to the stall current (see Figure 4).

Rated torque (Mn): Torque available on the shaft continuously (service S1) with rated speed and with a winding current equivalent to the rated current (see Figure 4).

Peak torque (Mpk): Torque available on the shaft discontinuously, with a winding current equivalent to the peak current (see Figure 4).

Stall current (Io): Current supplied to the motor continuously at a speed closed to zero, required to develop stall torque.

Rated current (In): Current supplied to the motor continuously at a rated speed, required to develop rated torque.

Peak current (Ipk): Current supplied to the motor discontinuously within a wide range of speed, required to develop peak torque (not to be exceeded to avoid magnet demagnetization).

Sinusoidal motor: The voltage waveform induced on motor phases by rotor rotation has a sinusoidal shape

Voltage constant (Ke): Ratio between voltage induced by the rotor rotation (RMS value for sinusoidal motor, peak value for trapezoidal motor) at a certain number of revolutions and angular speed ($\omega=2 \times \pi \times n/60$ where n is the speed expressed in rpm) measured in rad/sec. The induced phase to phase voltage at 1000 rpm is given by $V=Ke \times 1000 \times \pi/30$ Vrms

Torque constant (Kt): Ratio between torque on the shaft and the current RMS value for sinusoidal motors, peak value for trapezoidal motors (equivalent to the voltage constant of a trapezoidal motor and to that of a sinusoidal motor multiplied by $\sqrt{3}$).

Back electromotive force (B.E.M.F): Voltage induced by the rotor rotation (RMS value for sinusoidal motor, peak value for trapezoidal motor) at a certain number of revolutions.

Phasing procedure: Synchronization procedure of those signals generated by the transducer with the back electromotive force induced by the rotating rotor and measured between two phase terminals of the motor winding.

Saturation (saturation curve): It is made up of the peak torque curve combined with that representing the physical limit of the current, which may be expressed at some speed according to supply voltage (see Figure 4).

Duty cycle: In case of an intermittent duty cycle it is possible to overload the motor in proportion to the ratio between operating time and total cycle time: the figure shows two overload curves at 20% and 50% (S3 duty).

Torque to speed performance curve: continuous and intermittent duties.

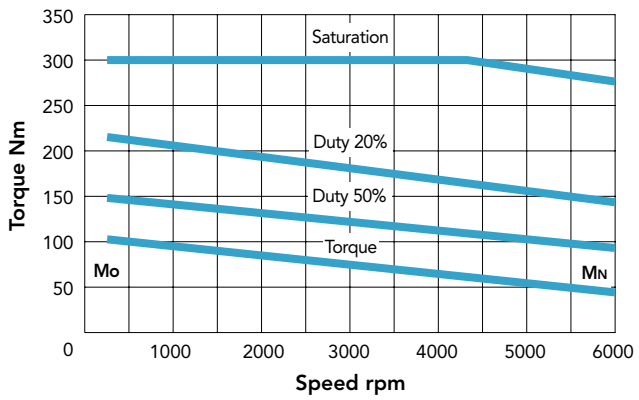

Fig. 4

Continuous duty area: It includes all points of the torque/speed figure where the load torque value is lower than or equivalent to the torque curve that joints Mo and Mn: therefore, this is a continuous operation duty. The continuous duty area is defined as the area below the torque curve in the motor speed range available (see Figure 4).

Intermittent duty area: It includes all points of the torque/speed figure where the load torque value is higher than the torque curve that joints Mo and Mn: therefore, this is non-continuous operation duty. The Intermittent duty area is defined as the area between the torque curve and the saturation curve (see Figure 4).

MOTOR IDENTIFICATION

In order to properly choose the motor, kinematic mechanism must be assessed, thus defining rated and stall torque, accelerations required through a speed torque graph compared with time, inertia of the machine (when a gearbox is coupled to the motor), and installation environment.
In order to make the choice of the motor easier, please refer to the Chapter "Order Data".

PHASING PROCEDURE

AUTOTUNING
In the event that the motor is equipped with a new generation digital drive you only need to carry out phasing procedures explained in the reference handbook, thus matching data indicated in the motor nameplate with related parameters.

STANDARD PHASING FOR MOTORS WITH RESOLVER

Example: 8 poles motor with 2 poles resolver

Disconnect terminals U, V, W from the drive.

Inject a direct current applying voltage with positive polarity in the Phase V and W (Blue and Red) and negative polarity in the phases U (Black): in this way the rotor of the motor results locked in a certain position. A current is required to hold the rotor in a fixed position, therefore without the presence of position clearance.

The resolver must be excited with an sinusoidal operating generator at 7Vrms - 10KHz or through a drive. Keeping, for instance, only electric supply Ecc+; Ecc- connected to the drive and leaving the other wires (Cos+, Sen+,Cos-, Sen-) free.

Display the signal Cos+ Sen+ using a two-channel oscilloscope by connecting each probe screen to the equipotential connections M0, including wires Cos-, Sen- and Ecc-.

Turn the stator of the resolver (always keeping the motor shaft hold) until the signal Cos+/M0 is null (<100mV) and the signal Sen+/M0 reaches the maximum value.

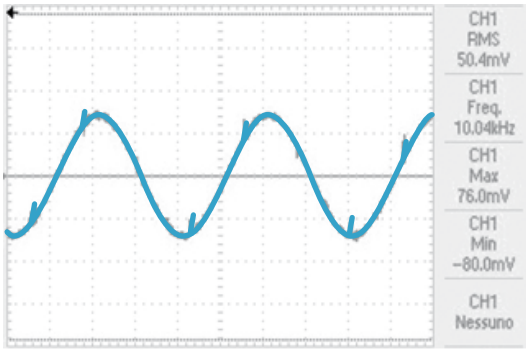

Fig. 5

In this position fix the stator of the resolver with the screws.

Turning the stator of resolver for 360 ° we'll find two positions (opposite) in which there is what is described above, both positions are correct.

With this feedback adjustment the motor end-shaft rotates in CW direction (looking the motor from the Drive-End/A-Side).

STANDARD PHASING FOR MOTORS WITH INCREMENTAL ENCODER

Disconnect terminals U, V, W from the drive.

The encoder must be excited with a power supply at 5V – 200mA or through a drive. Drag the motor with a test bench, making sure to turn it in a clockwise (looking at the flange end).

Display the "Motor signal SU" (generated between the motor phase U and V) using the channel 1 on the oscilloscope.

Display the "Encoder signal Hall U" using the channel 2 on the oscilloscope.

Turn the encoder until the signal "Hall U" appears in phase with the signal "SU", in this position fix the encoder with the screws (see picture).

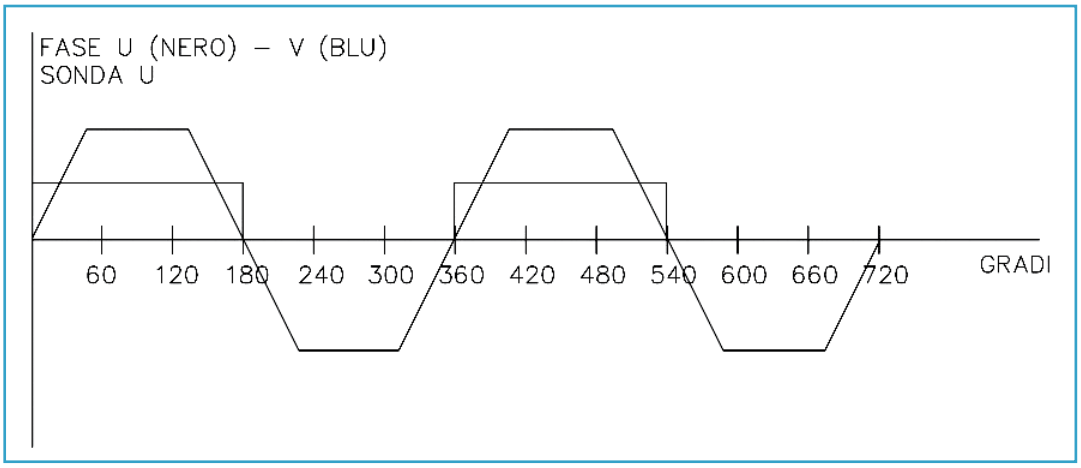

Fig. 6

Check the "Encoder signal Hall V" appears in phase with the "Motor signal SV" (generated between the motor phase V and W).

Check the "Encoder signal Hall W" appears in phase with the "Motor signal SW" (generated between the motor phase W and U).

STANDARD PHASING FOR MOTORS WITH ENCODER HIPERFACE AND DSL

Connect the signal connector by the Hyperface programmin Tool PGT-11-S, so the software recognizes the feedback mounted on the motor (See the picture => the picture valid only for example).

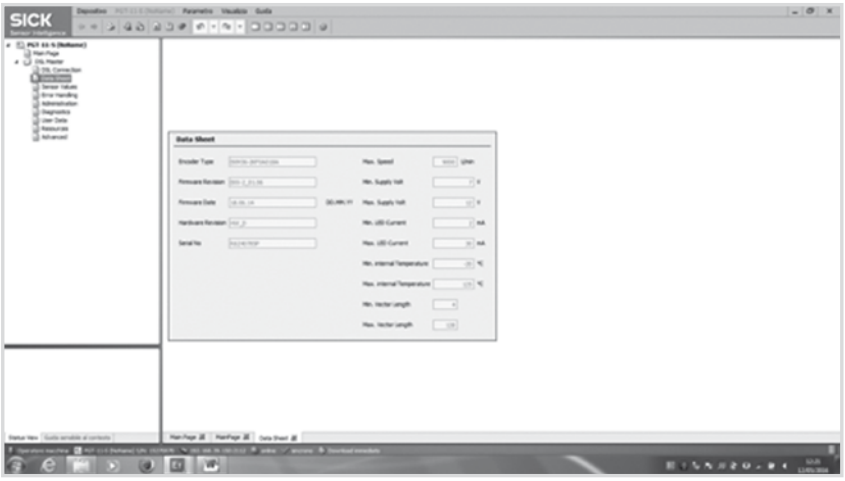

Fig. 7

Inject a direct current applying voltage with positive polarity in the Phase W (Red) and negative polarity in the Phases V (Blue): in this way the rotor of the motor results locked in a certain position. A current is required to hold the rotor in a fixed position, therefore without the presence of position clearance.

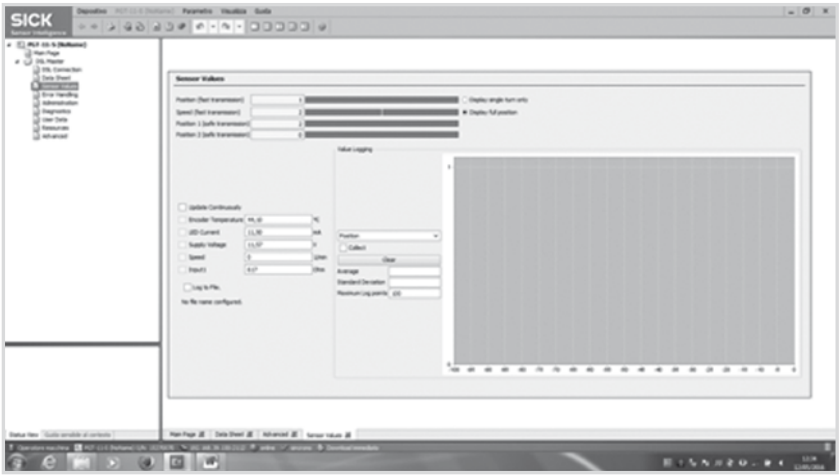

Fig. 8

In this position the encoder can be adjusted by the commutation angle = 0 ° The motor will be mechanically adjusted always on this position, so it should be possible to exchange one motor with another on the machine without further adjustments.

DEGREES OF PROTECTION

Degrees of mechanical protection for machines are designated in accordance with **IEC 60034-5** by the letters **IP** and two characteristic numerals.

First numeral: Protection against contact and ingress of foreign bodies

IP	Description
0	No special protection
1	Protection against solid foreign bodies larger than 50 mm (Example: inadvertent contact with the hand)
2	Protection against solid foreign bodies larger than 12 mm (Example: inadvertent contact with the fingers)
3	Protection against solid foreign bodies larger than 2.5 mm (Example: Wires, tools)
4	Protection against solid foreign bodies larger than 1 mm (Example: Wires, bands)
5	Protection against dust (harmful deposits of dust)
6	Complete protection against dust. Is not described for electrical machines to IEC 34-5

Second numeral: Protection against ingress of water

IP	Description
0	No special protection
1	Protection against vertically falling water drops (condensation)
2	Protection against dropping water when inclined by up to 15°
3	Protection against waterspray at up to 60° from vertical
4	Protection against water splashed from any direction
5	Protection against water projected by a nozzle from any direction
6	Protection against heavy seas or water projected in powerful jets
7	Protection when submerged between 0.15 and 1 m.
8	Protection when continuously submerged in water at conditions agreed between the manufacturer and the user

Series is manufactured with degree of protection IP65 except for the A-side flange (fully IP65 design available on request). Series B36, B56, B63, B71, B100 are fully designed in accordance with degree of protection IP65. In addition, IP67 motors can be designed on request.

IP65 protection is designed for motor end shaft running not immersed in oil (to be evaluated the working condition if the pressure of the oil on the shaft is ≠ 0). Specific design for motor end shaft immersed in oil is available on request.

BEARINGS

Specification of bearings (standard design).
Ball bearings in compliance with the regulation DIN 625.

Type	DE	NDE
B20Q	6900 2ZC3WT	699 2ZC3WT
B28Q	6000 2ZC3WT	6900 2ZC3WT
B30J	6002 2ZC3WT	6900 2ZC3WT
B36Q 0.6 - 1.8 Nm **B36Q 2.4 - 3 Nm**	6002 2ZC3WT 6004 2ZC3WT	6001 2ZC3WT 6003 2ZC3WT
B40J	6004 2ZC3WT	6002 2ZC3WT
B56Q	6202 2ZC3WT	6202 2ZC3WT
B63Q	6204 2ZC3WT	6204 2ZC3WT
B63Y	6205 2ZC3WT	6303 2ZC3WT
B71Q 4.5 - 26 Nm **B71Q 29 - 38 Nm**	6205 2ZC3WT 6206 2ZC3WT	6203 2ZC3WT 6304 2ZC3WT
B100J	6208 2ZC3WT	6206 2ZC3WT
B132I	6309 2ZC3WT	6208 2ZC3WT
B160Q	6314 2ZC3WT	6309 2ZC3WT
B10P	6208 2ZC3WT	6204 2ZC3WT
B16P	6216 2ZC3WT	6309 2ZC3WT
B18P	6224 2ZC3 WT	6212 2ZC3 WT

Tab. 1

BEARING MOUNTING

Type	DE-shield bearings	NDE-shield bearings	Preloading bearing
All	Locating bearings	Non-locating bearings	Non-drive end

Tab. 2

LUBRICATION

All motors have bearings with grease suitable for high and low temperature and permanent lubrication.
Grease type WT (asonic GHY 72) or LHT 23 (multemp) or ENS: suitable for low and high temperature (-40; 140 °C).

PAINT FINISH

NORMAL FINISH
Black finish with mono-component water-soluble enamel, suitable for applications in environments not exposed to climatic agents.

SPECIAL FINISH
Dull black finish with bi-component polyurethane, suitable even for environments partially exposed to climatic agents.

PERMISSIBLE RADIAL FORCES

Type	Speed (rpm) - Load in N 1500	2000	3000	4500	6000
B20Q D2					30
B20Q D3					40
B28Q D2					90
B28Q D5					100
B28Q D7					110
B28Q 01					120
B28Q E2					130
B30J D7					28
B30J E4					35
B36Q D6					148
B36Q E2					158
B36Q E8					168
B36Q F4					178
B36Q 03					188
B40J D7					215
B40J E4			240		225
B40J F7			250		243
B56Q E3			220		213
B56Q F6			235		228
B56Q G5			245		238
B56Q H5			255		248
B63Q 04			560	450	380
B63Q 06			580	470	395
B63Q 08			600	485	410
B63Q 10			620	495	420
B63Y 06			580	490	
B63Y 08			600	510	
B63Y 10			680	590	
B63Y 12			700	610	
B63Y 14			720	630	
B71Q 04		690	610	540	
B71Q 08		730	650	570	
B71Q 12		760	680	590	
B71Q 16		780	700	610	
B71Q 20		800	720	630	
B71Q 26		820	740	560	
B71Q 29		840	760	570	
B71Q 32		850	770	580	
B71Q 35		860	780	590	
B71Q 38		880	800	600	
B100J 20		980	860		
B100J 28		1050	930		
B100J 36		1120	1000		
B100J 42		1190	1070		
B100J 56		1260	1140		
B100J 68		1330	1210		
B100J 80		1400	1280		
B132I 42	3150	3100	3050		
B132I 58	3230	3180	3130		
B132I 73	3320	3270	3220		
B132I 81	3320	3270	3220		
B132I 98	3340	3290	3240		
B132I C2	3400	3350	3300		
B160Q C4	2650	2370	2090		
B160Q C8	2700	2420	2150		
B160Q B4	2750	2470	2190		
B160Q 300	2200	1980	1870*		

Type	Speed (rpm) - Load in N 300	500	1000
B10P 10		700	750
B10P 20		720	770
B16P 50	3400	3250	3150
B16P C0	3850	3700	3550
B16P C5	4100	3950	3800
B16P B0	4300	4150	4000
B18P CB	4550		
B18P BC	4900		
B18P 325	5250		
B18P 420	5600		
B18P 510	6000		

Tab. 3

*Motor available at 2500 rpm (not at 3000 rpm)

Load applied at mid-shaft, referred to motors without parking brake and calculated for 20.000 operation hours.
Axial loads have to be considered equal to 10% of the equivalent radial loads.
Additional load due to fixing screw in front of the end shaft not included. In case to be highlighted in the motor order.

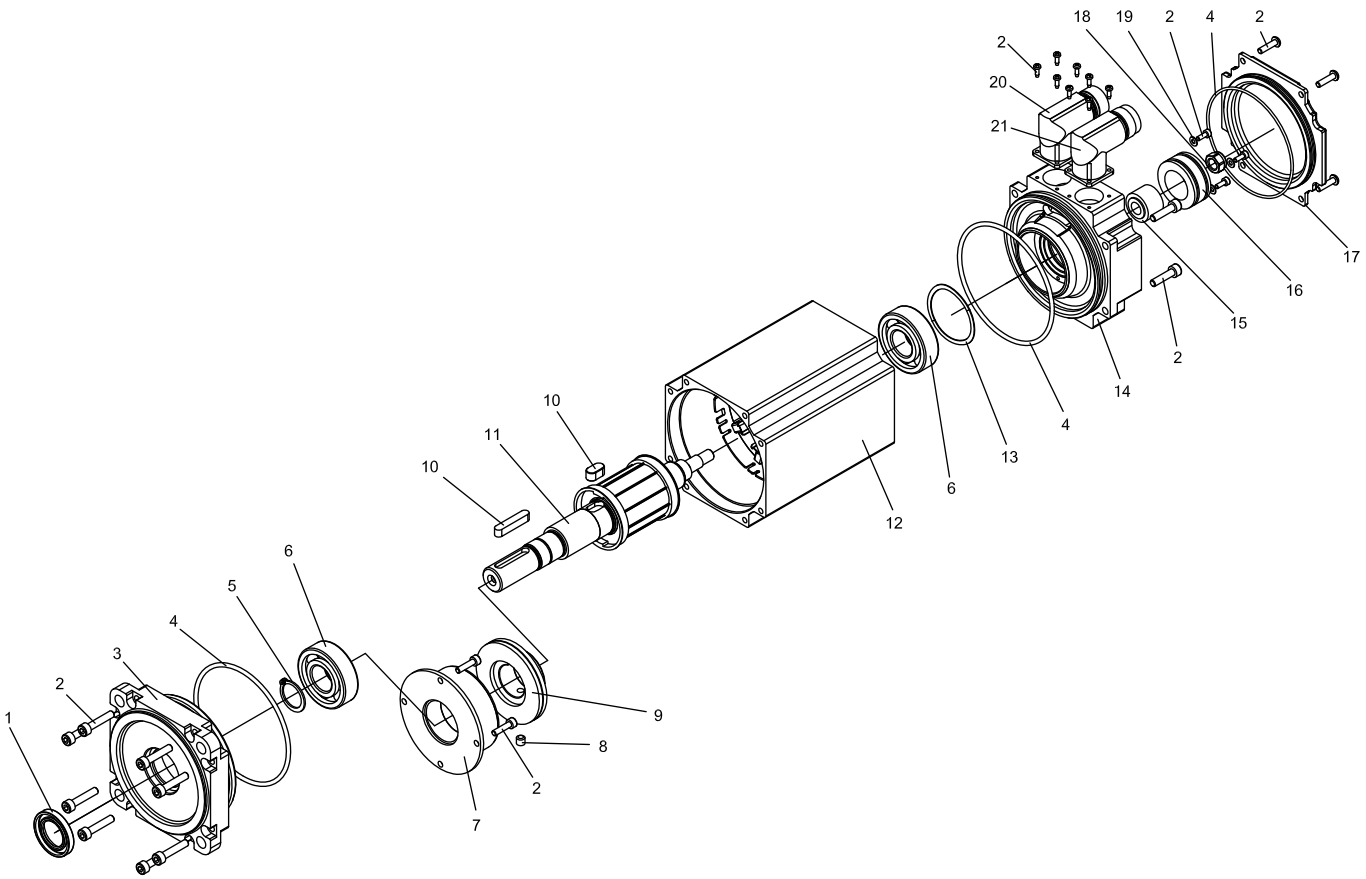

Drw.1

COMPONENTS DESCRIPTION CONNECTOR CONSTRUCTION

1	Oil seal	**11**	Rotor
2	Screw	**12**	Stator house with winding
3	A-flange	**13**	Spring ring
4	O-ring seal	**14**	B-flange
5	Snap ring	**15**	Feedback rotor
6	Bearing	**16**	Feedback stator
7	Brake magnet	**17**	Back cover
8	Screw nut	**18**	Nut
9	Brake hub	**19**	Caching washer
10	Shaft key	**20**	Signal connector
		21	Power connector

FEEDBACK

As previously indicated, motors may be equipped with various transducer types in order to meet the different requirements for precision, cost and other parameters. The standard motor includes the use of resolvers. Encoders, tachos and Hall sensors are also available.

RESOLVER

Resolver is a rotary transformer, which outputs AC voltage in accordance with angular position of the shaft. Resolver is excited by AC voltage to the rotor winding, and outputs from the stator windings sine and cosine voltages proportion to the rotation angle.

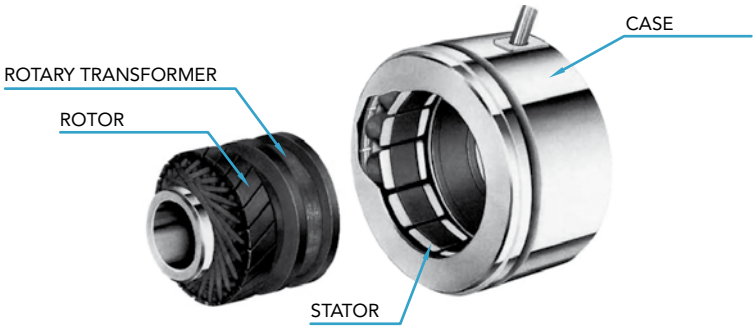

Drw. 2

Rated features	Assembled on the whole series	Units of measurement
Supply voltage	7 (±5%) 10 kHz	Vrms
Maximum speed	10000	rpm
Input current	50	mA
Pole number	2/4	/
Transformation ratio	0.5 ±5%	/
Electric error	±8’	°(Elect)

Tab. 4

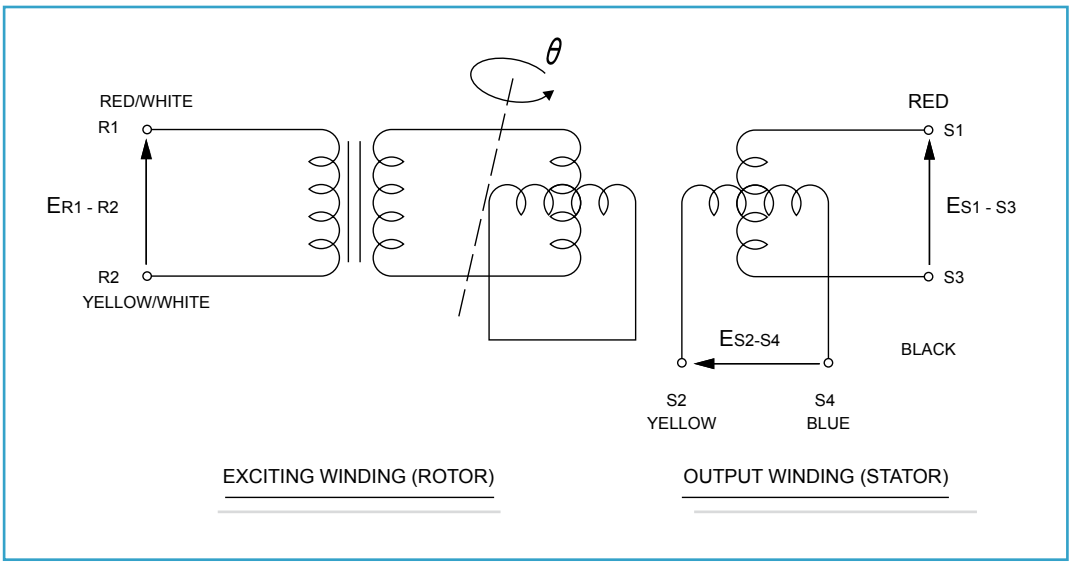

Drw. 3

INCREMENTAL ENCODER

Rated features	Assembled on the whole series	Units of measurement
Supply voltage	5 (±5%)	Vrms
Impulse number per revolution	1000 - 4096	ppr
Pole number	8 [1)]	/
Maximum frequency	100	KHz
Permitted maximum current	150	mA
Maximum speed	6000	min^{-1}
Encoder electronics	Line driver [2)]	/
Hall electronics	NPN open collector [2)]	/

Tab. 5

1) 6 and 10 poles available
2) Further types of electronics available

ENCODER HIPERFACE SRS/SM50

Technical Data		
Encoder electronics		Hiperface
Code type for the absolute value		Binary
Number of sine/cosine periods per revolution		1024
Number of the absolute ascertainable revolutions	Single SRS Multi SRM	1 4096
Output frequency for sine/cosine signals		0…200 kHz
Max. operation speed		12000 min^{-1}
Operating voltage range		7…12 V
Max. operating current, no load		80 mA
Interface signals	Process data channel = SIN, REFSIN, COS, REFCOS	Analogue, differential
	Parameter channel = RS 485	Digital
Working temperature range		-20° / +115° C

Tab.6

SIGNAL SPECIFICATION OF THE PROCESS DATA CHANNEL

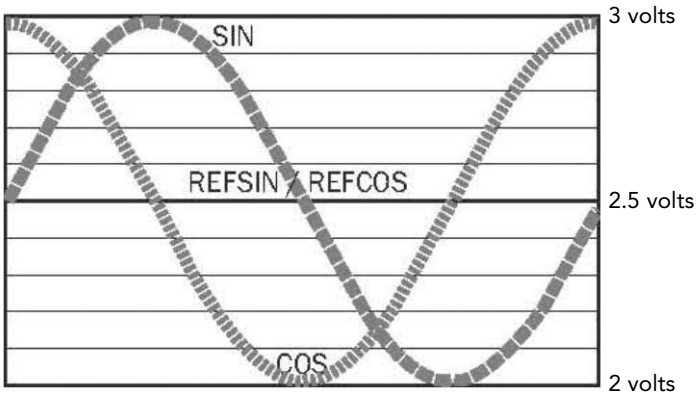

1 period = 360°:1024

Fig. 9

Access to the process data used for speed control i.e. to the sine and cosine signals, is practically always "online". When the supply voltage is applied, the speed controller has access to this information at any time. Sophisticated technology guarantees stable amplitudes of the analogue signals across all specified environmental conditions, with a maximum variation of only ± 20.

ENCODER HIPERFACE SEK/SEL37

Technical Data		
Encoder electronics		Hiperface
Code type for the absolute value		Binary
Number of sine/cosine periods per revolution		16
Number of the absolute ascertainable revolutions	Single SEK Multi SEL	1 4096
Output frequency for sine/cosine signals		0…200 kHz
Max. operation speed		12000 min-1
Operating voltage range		7…12 V
Max. operating current, no load		50 mA
Interface signals	Process data channel = SIN, REFSIN, COS, REFCOS	Analogue, differential
	Parameter channel = RS 485	Digital
Working temperature range	Single SEK Multi SEL	-40° / +115° C -20° / +115° C

Tab.7

SIGNAL SPECIFICATION OF THE PROCESS DATA CHANNEL

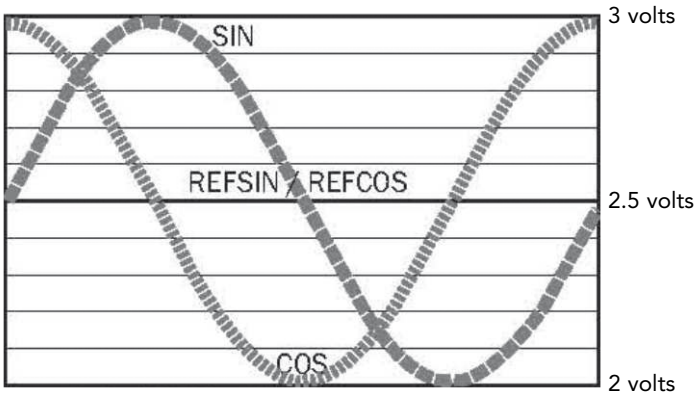

1 period = 360°:16

Fig. 10

Access to the process data used for speed control i.e. to the sine and cosine signals, is practically always "online". When the supply voltage is applied, the speed controller has access to this information at any time. Sophisticated technology guarantees stable amplitudes of the analogue signals across all specified environmental conditions, with a maximum variation of only ± 20.

ENCODER HIPERFACE SKS/SKM36

Technical Data		
Encoder electronics		Hiperface
Code type for the absolute value		Binary
Number of sine/cosine periods per revolution		128
Number of the absolute ascertainable revolutions	Single SKS Multi SKM	1 4096
Output frequency for sine/cosine signals		0…65 kHz
Max. operation speed		12000 / 9000 min-1
Operating voltage range		7…12 V
Max. operating current, no load		60 mA
Interface signals	Process data channel = SIN, REFSIN, COS, REFCOS	Analogue, differential
	Parameter channel = RS 485	Digital
Working temperature range		-20° / +115° C

Tab.8

SIGNAL SPECIFICATION OF THE PROCESS DATA CHANNEL

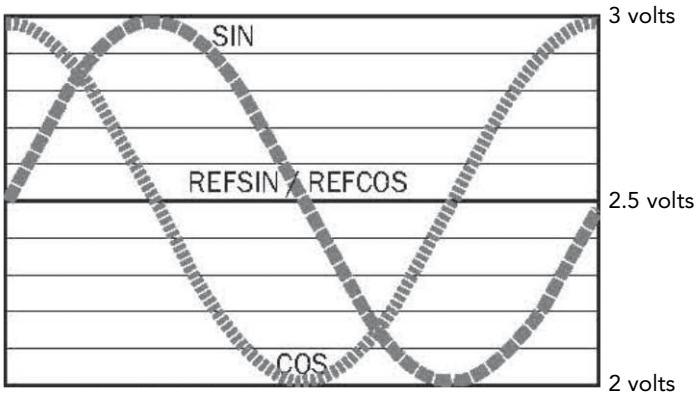

1 period = 360°:128

Fig. 11

Access to the process data used for speed control i.e. to the sine and cosine signals, is practically always "online". When the supply voltage is applied, the speed controller has access to this information at any time. Sophisticated technology guarantees stable amplitudes of the analogue signals across all specified environmental conditions, with a maximum variation of only ± 20.

ENCODER HIPERFACE DSL EKS/EKM36

PERFORMANCE		
	Singleturn	**Multi-turn**
Resolution per revolution	18 bits	18 bits
Signal noise	± 5″	± 5″
Number of absolutely encodable revolutions	1	4,096
Measuring step per revolution	262,144	262,144
Error limits positional values Integral non-linearity in angular seconds	± 80	± 80
Error limits positional values Differential non-linearity in angular seconds	± 40	
Max speed when switching on and resetting the motor feedback system	6000 min^{-1}	
Available memory area	8,192 bytes	
INTERFACES		
Code type for the absolute value	Binary	
Code sequence	Increasing, when turning the shaft for clockwise rotation, looking in direction "A" (see dimensional drawing)	
Interface signals HIPERFACE DSL	Digital, RS485 1)	
Initialization time	Max 500 ms, on reaching a permissible operating voltage	
Measurement external temperature resistance	Output format: 32 bit value, without prefix Output unit: 1 ℧ Measuring range: 0 – 209600 ℧ Typical accuracy at -40°C - +160°C: NTC ±2K; PTC ±3K	
ELECTRICAL DATA		
Operating voltage range/supply voltage	7 – 12 V	
Warm-up time voltage ramp	Max 180 ms (duration of voltage ramp between 0 and 7.0 V)	
Operating current	Max 150 mA	
Output frequency for the digital position value	0 – 75 kHz	
AMBIENT CONDITION		
Working temperature range	-20°C - +115°C	
Storage temperature range	-40°C - +125°C	

Tab.9

THERMAL PROTECTION

All our motors are equipped with a single PTO switch. a thermal on-off detector that activates itself at a temperature of 140 °C (standard tolerance 5 °C).
However a LPTC600 or a LPTC1000F may be used as an alternative.

PARKING BRAKE

Motors with option "B" (in the alphanumeric code it is the 10th position as from the left: "A" and "D" no brake, "B"and "E" brake), are equipped with a parking brake with features depending on the series. See specific table for each motor type (see section Motor type codes used, pages 40-41).

FORCED VENTILATION

All standard motors are not ventilated; they are therefore cooled by conduction and convection through the surface (system IC410 or IC416).

In the series from B63 through B160, forced ventilation motors are also available. In this way it is possible to increase torque and current rated values by 30%. Length dimensions increase as well to accommodate the cooling fan (reference data is indicated in the table below). All fan have a degree of protection equal to IP20 (max IP54).

Fan characteristics depend on motor size according to table below:

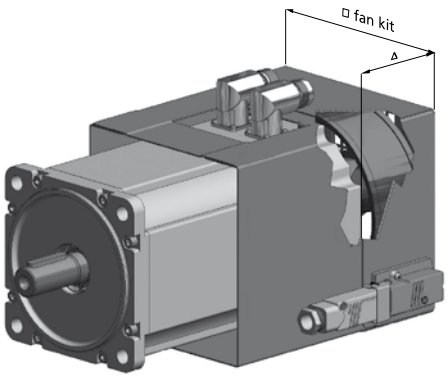

Drw. 4

TOTAL MOTOR LENGTH WITH FAN KIT

Type	Voltage Volt	Power Consumption	Fan Kit square (mm)	Δ L (mm)
B63Q	24 Vdc 230 Vac, 50/60 Hz	11 W 12 W	122 x 122	87
B71Q	24 Vdc 230 Vac, 50/60 Hz	12 W 47 W	164 x 164	98
B100J	24 Vdc 230 Vac, 50/60 Hz	12 W 47 W	212 x 212	110
B132I	24 Vdc 230 Vac, 50/60 Hz	12 W 47 W	246 x 246	116
B160Q	24 Vdc 230 Vac, 50/60 Hz	105W 136/185W	295 x 295	175

* Motor length with encoder = motor length with resolver + Δ L

Tab. 10

CONNECTIONS

The standard signal and power connections described below refer to motors equipped with resolver and encoder. The options listed may be customised according to the specific requirements of the customer.

SIGNAL CONNECTORS

Type	N° Pin	Male connector code	Female connector code	Connector shape
All	12	XCNS90R1C01B	XCNS0002C01B	90° Turnable
All	17	XCNS90R1E01B	XCNS0002E01B	90° Turnable

Tab. 11

POWER CONNECTORS

Type	N° Pin	Male connector code	Female connector code	Continuous current: max I_{rms} phase / I_{cc} Brake	Connector shape
B28, B36, B56, B63, B71, B100	8	XCNP8PA90R1B	XCNP8PB0001B	30 / 10	90° Turnable
B71, B100, B132	8	XCNP8PC90R1B	XCNP8PCB001B	75 / 20	90° Turnable

Tab. 12

FAN CONNECTORS

Type	N° PIN	Male connector code	Female connector code	PIN	Signal
B63, B71, B100 B132, B160	4	XCN0STASAP3N	XCN0STAK003N	1	+24 Vdc or 230 Vac
	4			2	N.c.
	4		XCN0STASI003	3	0 Vdc or 0 Vac
	4			PE	Ground

Tab. 13

CONNECTION RESOLVER

Signal connector

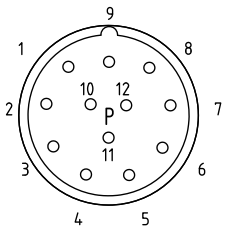

Power connector

Size 1 OR Size 1.5

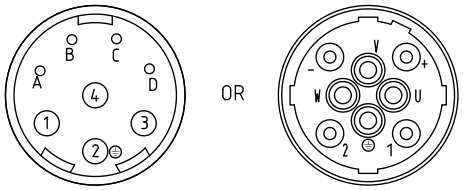

Pin	Signal	Colour
1	S2	Yellow
2	S1	Red
3	S3	Black
4	N.c.	N.c.
5	N.c.	N.c.
6	S4	Blue
7	R1	Red-White
8	N.c.	N.c
9	PTO	White
10	PTO	White
11	R2	Yellow-White
12	N.c.	N.c.

Pin Size 1.5	Pin Size 1	Signal	Colour
U	1	Phase U	Black
V	3	Phase V	Blue
W	4	Phase W	Red
⏚	2⏚	Motor Case	
1	A	N.c.	N.c.
2	B	N.c.	N.c.
+	C	+24V Brake (Option)	Red
-	D	0V Brake (Option)	Blue or Black

Drw.5

CONNECTION RESOLVER: TORQUE MOTORS

Signal connector

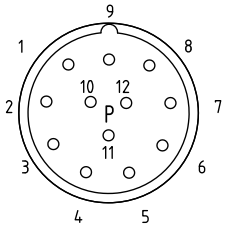

Power connector

Size 1 OR Size 1.5

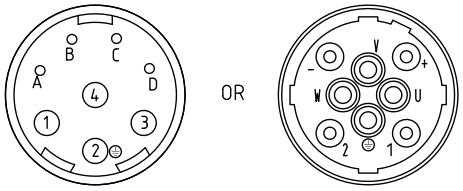

Pin	Signal	Colour
1	S2	Yellow
2	S1	Red
3	S3	Black
4	N.c.	N.c.
5	N.c.	N.c.
6	S4	Blue
7	R1	Red-White
8	Shield	Shield
9	N.c.	N.c.
10	N.c.	N.c.
11	R3	Yellow-White
12	N.c.	N.c.

Pin Size 1.5	Pin Size 1	Signal	Colour
U	1	Phase U	Black
V	3	Phase V	Blue
W	4	Phase W	Red
⏚	2⏚	Motor Case	
1	A	Thermal Prot	White
2	B	Thermal Prot	White
-	C	+24V Brake (Option)	Red
-	D	0V Brake (Option)	Blue

Drw.6

CONNECTION ENCODER INCREMENTAL

Signal connector

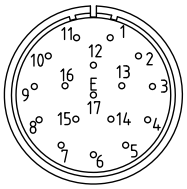

Pin	Signal	Colour
1	HALL V	White
2	HALL V-	White-Black
3	Z	Yellow
4	Z-	Yellow-Black
5	HALL U	Brown
6	HALL U-	Brown-Black
7	B	Blue
8	B-	Blue-Black
9	A	Green
10	A-	Green-Black
11	+5V	Red
12	HALL W	Grey
13	HALL W-	Grey-Black
14	PTO	White
15	PTO	White
16	0V	Black
17	Shield	Shield

Power connector

Size 1 OR Size 1.5

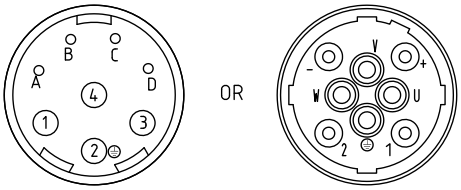

Pin Size 1	Pin Size 1.5	Signal	Colour
1	U	Phase U	Black
3	V	Phase V	Blue
4	W	Phase W	Red
2⏚	⏚	Motor Case	
A	1	N.c.	N.c.
B	2	N.c.	N.c.
C	+	+24V Brake (Option)	Red
D	-	0V Brake (Option)	Blue or Black

Drw. 7

CONNECTION ENCODER HIPERFACE

Signal connector

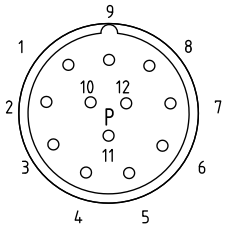

Pin	Signal	Colour
1	Us (7-12 V)	Red
2	GND	Blue
3	Ref Sin	Brown
4	Ref Cos	Black
5	Data+	Grey
6	Data-	Green
7	+ Sin	White
8	+ Cos	Pink
9	PTO	White
10	PTO	White
11	N.c.	N.c.
12	N.c.	N.c.

Power connector

Size 1 OR Size 1.5

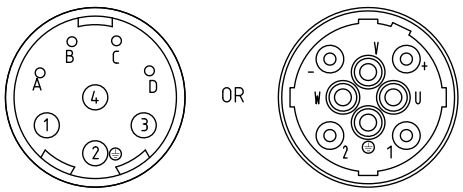

Pin Size 1.5	Pin Size 1	Signal	Colour
U	1	Phase U	Black
V	3	Phase V	Blue
W	4	Phase W	Red
⏚	2⏚	Motor Case	
1	A	N.c.	N.c.
2	B	N.c.	N.c.
+	C	+24V Brake (Option)	Red
-	D	0V Brake (Option)	Blue or Black

N.B. The encoder shild must be connected on the grounded into the cover

Drw. 8

CONNECTION ENCODER HIPERFACE DSL

Power connector

Size 1 **Size 1.5**

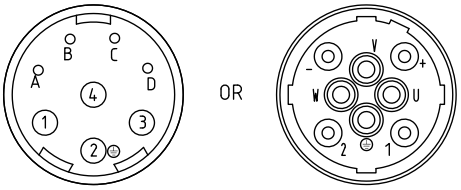

Pin Size 1.5	Pin Size 1	Signal	Colour
U	1	Phase U	Black
V	3	Phase V	Blue
W	4	Phase W	Red
⏚	⏚2	Encoder Shield	Encoder Shield
1	A	HDSL +	White or Grey
2	B	HDSL -	Brown or Green
+	C	+24V Brake (Option)	Red
-	D	0V Brake (Option)	Blue

N.B. The encoder shild must be connected on the grounded into the cover

Drw.9

CONNECTION 4

Fixed connectors for power-brake and signals.

Type	Power Connector	c (mm)	d (mm)	Signal connector
B28, B36, B40, B56	8 PIN SIZE 1	100	72	M23-12 Pin or M23-17 Pin
B63	8 PIN SIZE 1	100	72	M23-12 Pin or M23-17 Pin
B71 - 4.5 to 26 Nm	8 PIN SIZE 1	100	72	M23-12 Pin or M23-17 Pin
B71 - 29 to 38 Nm	8 PIN SIZE 1/1.5	100/130	72	M23-12 Pin or M23-17 Pin
B100 - 20 to 42 Nm	8 PIN SIZE 1	100	72	M23-12 Pin or M23-17 Pin
B100 - 56 to 80 Nm	8 PIN SIZE 1/1.5	100/130	72	M23-12 Pin or M23-17 Pin
B132	8 PIN SIZE 1.5	130	72	M23-12 Pin or M23-17 Pin

Tab. 14

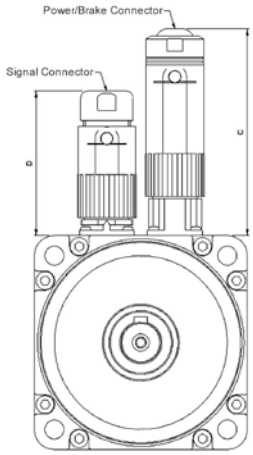

Drw. 10

CONNECTION 7

Power and signal connectors 90° angled turnable, anchored to the aluminium frame.
The connector direction can be defined through motor type (see page 40-41).
For type B160, the connector is fixed (not turnable) except for the self cooled version with power connector size 1.5.

Type Distances referred to the connector in (mm)	B20	B28	B30	B36	B40	B56	B63	B71	B100	B132	B160
b	-	47	-	42	42	42	42	42-62	42-62	62	62

Tab. 15

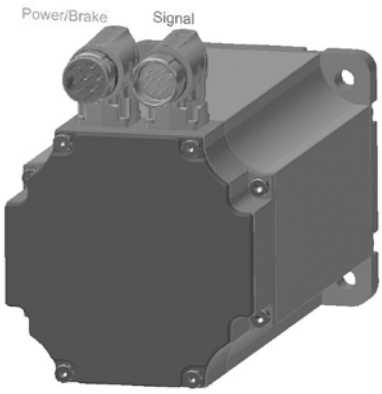

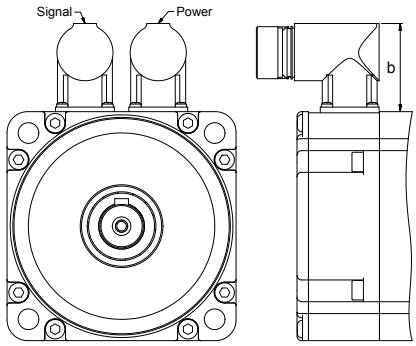

Drw. 11

CONNECTION 8

Type Distances referred to the connector in (mm)	B20	B28	B30	B36	B40	B56	B63	B71	B100	B132	B160
b	25	25	22	20	20	-	-	-	-	-	-

Tab. 16

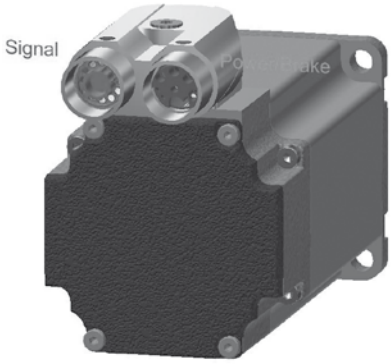

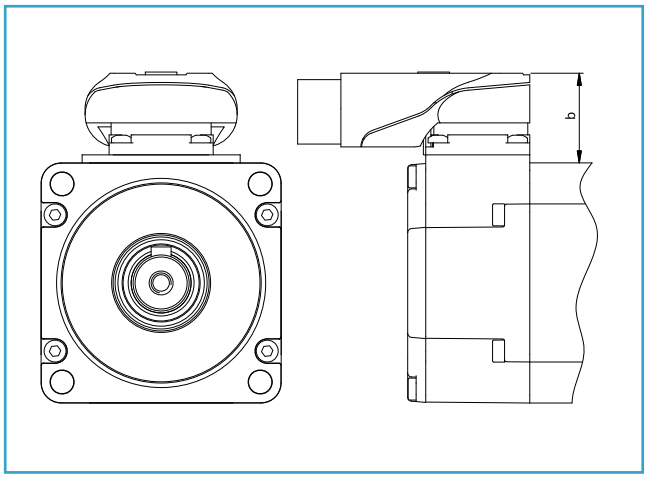

Drw. 12

DIRECTION OF CONNECTORS

With reference to connection 7: generally directions "standard" and "2" applies to all motor series manufactured with 90° angled connectors.
For motor type B160 with fan cooling, the only possible direction is "2".

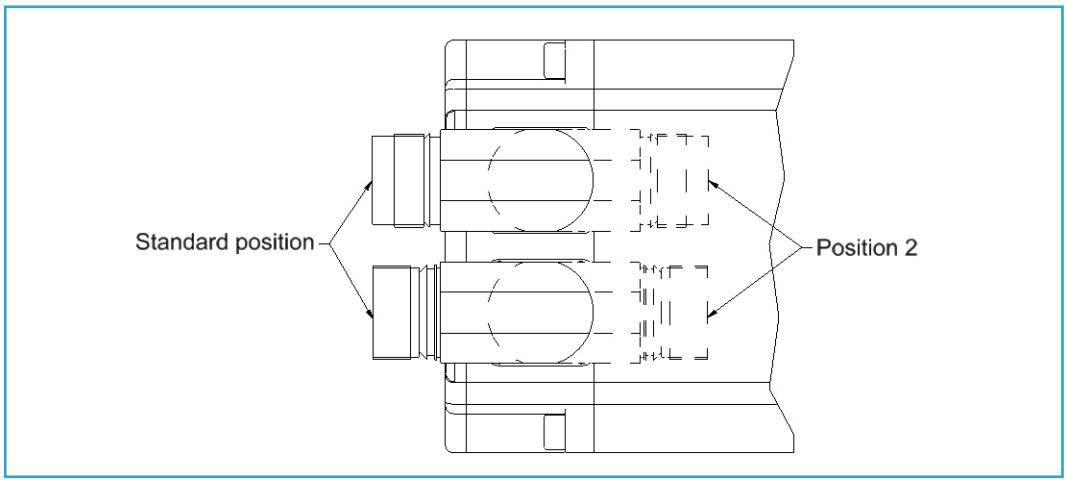

Drw. 13

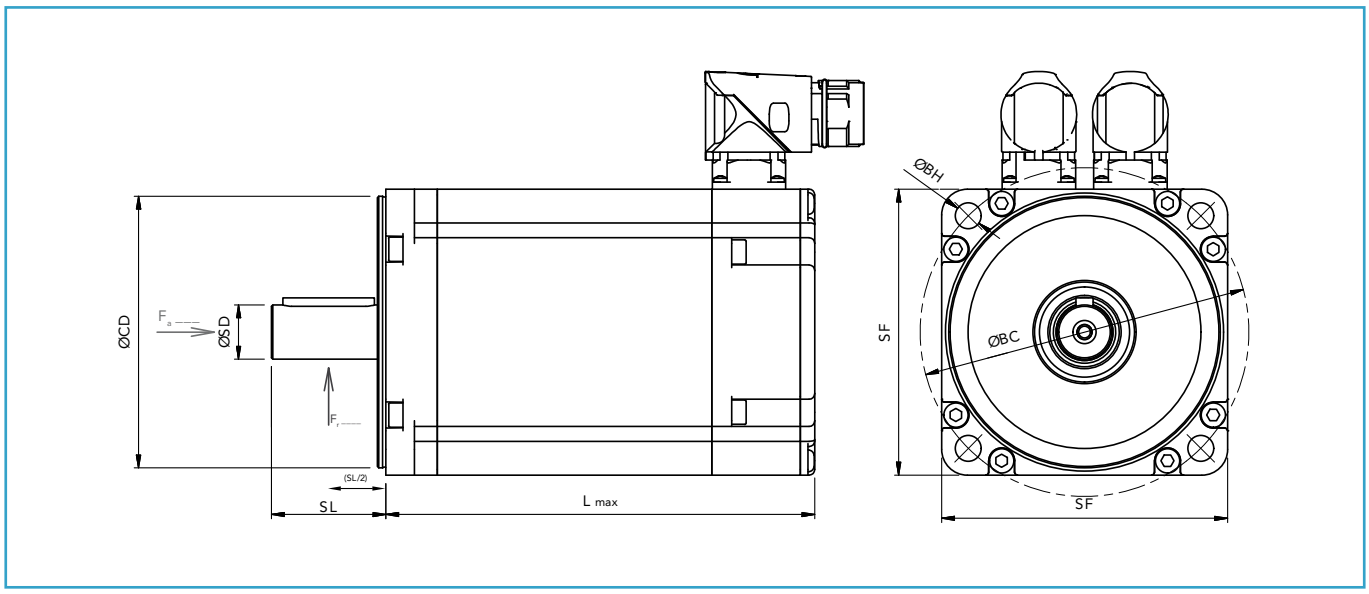

Drw. 14

NOMENCLATURE

SF = Square Flange	**BH** = Bolt Hole Diameter Ø	**L** = Motor Length
CD = Centring Diameter Ø	**SD** = Shaft Diameter Ø	**F_a** = Axial Load
BC = Bolt Circle Diameter Ø	**SL** = Shaft Length	**F_r** = Radial Load

Type	Square flange SF [mm]	Torque [Nm]	Rated speed [rpm]	Centring diameter ø - CD [mm]	Bolt circle diameter ø - BC [mm]	Shaft diameter ø - SD [mm]	Shaft length SL [mm]
B20Q	40	0.18 to 0.32	6000	Ø30h7	46	8h6	20/25
B28Q	58	0.25 to 1.25	3000 – 6000	Ø40j6	63	9j6	20
B30J	60	0.7 to 1.4	6000	Ø50h7	70	14h6	25/30
B36Q	70	0.6 to 1.8	3000 – 6000	Ø60j6	75	11j6	23
	70	2.4 to 3	3000 – 6000	Ø60j6	75	14j6	30
B40J	80	0.7 to 2.7	3000 – 6000	Ø70h7	90	16h6	35/40
B56Q	91.3	1.35 to 4.5	3000 – 6000	Ø80j6	100	14j6	30
B63Q	100	4 to 10	3000 – 4500 – 6000	Ø95j6	115	19k6	40
B63Y	116	6 to 8	3000 – 4500	Ø110j6	130	19j6	40
	116	10 to 14	3000 – 4500	Ø110j6	130	24j6	50
B71Q	142	4.5 to 26	2000 – 3000 – 4500	Ø130j6	165	24k6	50
	142	29 to 38	2000 – 3000 – 4500	Ø130j6	165	28k6	58
B100J	190	20 to 42	2000 – 3000	Ø180j6	215	32k6	58
	190	56 to 80	2000 – 3000	Ø180j6	215	38k6	80
B132I	240	42 to 73	1500 – 2000 – 3000	Ø230j6	265	38k6	80
	240	81 to 120	1500 – 2000 – 3000	Ø230j6	265	42k6	110
B160Q	270	140 to 240	1500 – 2000 – 3000	Ø250h7	300	55m6	110
	270	300	1500 – 2000 – 2500	Ø250h7	300	60m6	140

Tab. 17

MOTOR TYPE CODES USED

DIGIT	DESCRIPTION

x

PRODUCT TYPE

B	Complete Brushless Servomotor
F	Brushless Servomotor components

aa

STANDARD MOTOR SIZE

B20Q	☐ Flange 40
B28Q	☐ Flange 58
B30J	☐ Flange 60
B36Q	☐ Flange 70
B40J	☐ Flange 80
B56Q	☐ Flange 91.3
B63Q	☐ Flange 100
B63Y	☐ Flange 116
B71Q	☐ Flange 142
B100J	☐ Flange 190
B132I	☐ Flange 240
B160Q	☐ Flange 270

TORQUE MOTOR SIZE

B10	☐ Flange typical 225
B16	☐ Flange typical 275
B18	☐ Flange typical 386

bb

STALL TORQUE CODE

Integer: digit + digit		Fractional: letter + digit (x)		Over hundred: letter + digit or letter		Over Threehundred: digit + digir + digit	
02	2 Nm	Dx	0.x Nm	C0	100 Nm	300	300 Nm
12	12 Nm	Ex	1.x Nm	CA	105 Nm	375	375 Nm
25	25 Nm	Fx	2.x Nm	C1	110 Nm	460	460 Nm
…	etc...	Gx	3.x Nm	CB	115 Nm	…	etc..
		Hx	4.x Nm	…	etc..		
		Ix	5.x Nm	B0	200 Nm		
		Lx	6.x Nm	BA	205 Nm		
		Mx	7.x Nm	B1	210 Nm		
		Nx	8.x Nm	BB	215 Nm		
		Ox	9.x Nm	...	etc..		

c

SINUSOIDAL STANDARD MOTOR TYPE

Size	Series	Description
20	Q	8 poles
28	Q	8 poles
30	J	10 poles
36	Q	8 poles
40	J	10 poles
56	Q	8 poles
63	Q	8 poles
63	Y	10 poles
71	Q	8 poles
100	J	10 poles
132	I	6 poles
160	Q	8 poles

SINUSOIDAL TORQUE MOTOR TYPE

Size	Series	Description
10	P	12 poles
16	P	24 poles
18	P	30 poles

d

SPEED

1	1000 rpm	A	1500 rpm	P	200 rpm
2	2000 rpm	B	2500 rpm	Q	300 rpm
3	3000 rpm	C	3500 rpm	R	400 rpm
4	4000 rpm	D	4500 rpm	O	500 rpm
6	6000 rpm				

e

VOLTAGE

M	220/230V (On request)
H	380/400V

MOTOR TYPE CODES USED

DIGIT	DESCRIPTION
f	**CONNECTION TYPE** 4 Straight connectors on endshield 7 Turnable 90° angled connectors 8 Y-TEC connector *Terminal box construction to be evaluated on special request only* *Single connector design available on request depending on transducer requirements*
g	**BRAKE AND SHAFT EXTENSION** A Without brake, keyed shaft B With brake, keyed shaft C With reinforced brake, keyed shaft D Without brake, smooth shaft E With brake, smooth shaft F With reinforced brake, smooth shaft
hh	**FEEDBACK*** ** Availability of each feedback system and/or ppr to be evaluated on the motor size* 00 Without feedback **RESOLVER** 05 Resolver 2 poles A5 Resolver 4 poles **SIN / COS HIPERFACE ENCODER** RS Single-turn 1024 sin/cos Stegmann SRS50 RM Multi-turn 1024 sin/cos, 4096 rev. Stegmann SRM50 EK Single-turn 16 sin/cos Stegmann SEK37 EL Multi-turn 16 sin/cos, 4096 rev. Stegmann SEL37 KS Single-turn 128 sin/cos Stegmann SKS36 KM Multi-turn 128 sin/cos, 4096 rev. Stegmann SKM36 LE DSL, Multi-turn, 18 bit, EKM36 LF DSL, Single-turn 18 bit, EKM36 EnDat or other Hiperface encoders available on request **INCREMENTAL ENCODER** With Hall sensors and 0 reference mark E9 1000 ppr 09 1024 ppr L9 2000 ppr F9 2048 ppr N9 2500 ppr* H9 4096 ppr* ** only 10 poles available*
i	**CONNECTION DIRECTION*** 0 Standard 2 Position 2
l	**COOLING SYSTEM** 0 Natural convection V Forced Ventilation 230Vac from B-Flange to A-Flange X Forced Ventilation 24Vdc from B-Flange to A-Flange
mm	**CUSTOMER OPTION**

	x	aa	bb	c	d	e	f	g	hh	i	l	mm	*
Eg.:	B	63	08	Q	3	H	4	A	05	0	0	00	-EX

** -EX only for ATEX motor*

PRODUCT REQUEST: TO BE SUBMITTED FOR EVERY REQUEST WITHOUT MOTOR CODE

CUSTOMER NAME	Name
Enquiry date (initial request)	12/07/2019
Revision N°	00 dated 02/10/2019
Notes on the Enquiry	...
Target price [€]	...

QUANTITIES [pcs/year]	Value
Batch size [pcs/batch]	...
Motor sample [units]	...

APPLICATION DESCRIPTION		
Brief description of the application	...	
Typical ambient temperature [°C]	...	please specify if different from standard
Typical altitude [m]	...	please specify if different from standard
Heating sources close to the motor frame/flange (specify temperatures)	...	please specify if different
Axial load [N] - F_a	...	please specify if different
Radial load [N] - F_r	...	please specify if different
Additional - Axial / Radial loads (F_a/F_r diagrams)		please attach/describe the Load / Time diagram WHEN available
Present motor used: supplier and motor type	...	
Present drive used: supplier, size (Arms), phasing procedure	...	

DIMENSIONAL CONSTRAINTS, IF ANY		
Maximum motor diameter allowed [mm]	...	please specify if different from standard
Maximum motor lenght allowed [mm]	...	please specify if different from standard

STANDARD CONFIGURATION	
Please specify if different from below:	
Connectors 90° turnable	...
IP65 (with oil seal); IP64 for B28Q	...
Thermal sensor: PT0 140°C	...

ORDER DATA

MOTOR TYPE - STANDARD RANGE	B56Q	(select from list, otherwise follow below)
DIMENSIONS (automatic filling in white)		
Square flange [mm] - SF	91,3	
Centring diameter [mm] - ØCD	Ø80j6	
Bolt circle diameter [mm] - ØBC	Ø100	
Bolt hole diameter [mm] - ØBH		
Shaft diameter [mm] - ØSD	Ø14	
Shaft length [mm] - ØSL	30	
End shaft type (smooth/keyed)	Smooth	(select from list) -NEEDED for production
Motor length according to Catalogue - L		
Specials, if any	…	
Brake (yes/no/special)	yes	(select from list)
For selected motor type above, holding torque is:	…	Nm (automatic filling)
Pls specify Holding brake if different from std motors	…	Nm
Motor cooling (self/air/water/flange/cooling)	Self cooling	(select from list)

MOTOR PERFORMANCE	
Rated Voltage [Vac]	…
Standstill torque, M0 [Nm]	…
Rated Torque, Mn [Nm]	…
Rated speed [rpm]	…
Peak torque, Mpk [Nm]	…
Load cycle (Torque/time)	Attach / Describe diagram
Speed cycle (Speed/time)	Attach / Describe diagram

TRANSDUCER DEFINITION	
Resolver: specify n° of poles	…
Encoder incremental single turn: specify n° of ppr	…
Encoder incremental multi turn: specify n° of ppr	…
Encoder absolute: specify n° of ppr	…
Other specific transducer: attach mechanical drawing and pin-out if different from Lafert Standard	...

SPECIAL REQUIREMENTS	
Please specify any special requirements, in addition to deviations to standard configuration, such as: Special rotor balancing grade, Special shaft material, Rotor inertia, Others	…

MOTOR CODE	
Please use one sheet for each motor requested	…

STICKER NAMEPLATES

STANDARD

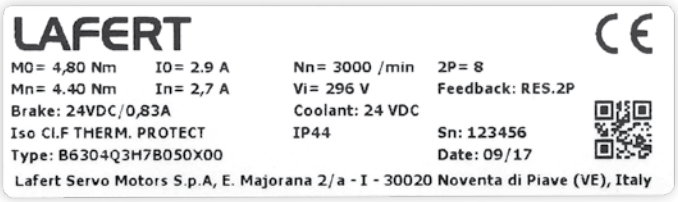

SMALL

ADDITIONAL

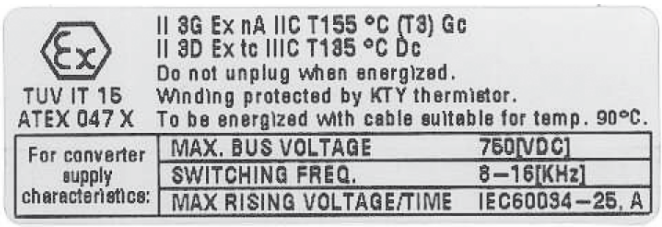

BRUSHLESS SERVO MOTORS

FOR MAINS VOLTAGE
400 V

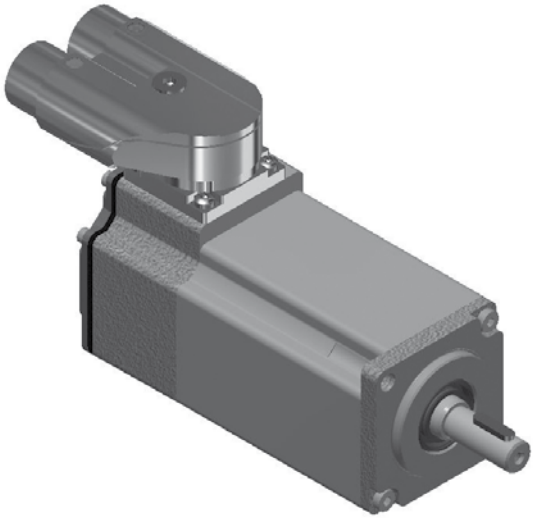

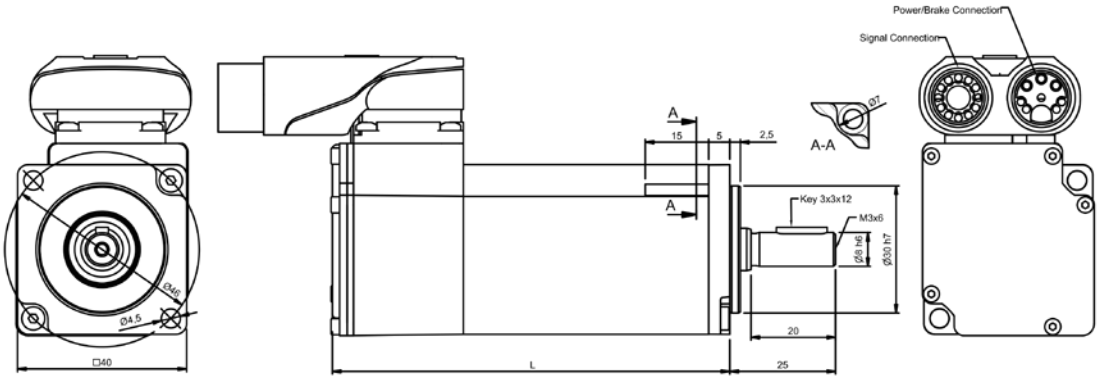

MECHANICAL DATA

Type	Torque Nm	Length with RESOLVER (L) Without brake	Length with RESOLVER (L) With brake	Maximum Length with ENCODER (L) Without brake	Maximum Length with ENCODER (L) With brake	Weight Kg Without brake	Weight Kg With brake
B20.D2Q	0.18	79	102	87.5	110.5	0.4	0.5
B20.D3Q	0.32	94	117	102.5	125.5	0.5	0.6

BRAKE DATA

Brake data	Symbol	Data	Unit
Holding torque 100°C	Mbr	0.35	Nm
Voltage	Ubr	24	Vdc +/- 10%
Resistance	Rbr	72	Ohm
Electrical Power	Pbr	8	W
Current	Ibr	0.33	Adc
Additional* Rotor Inertia	Jbr	0.013	$kgcm^2$
Opening (release) time	to max	10	ms
Closing (fall in) time	tc max	6	ms
Additional* Motor weight	mbr	0.1	kg

* Additional values are related to the motor data when the brake is mounted on the motor of the respective size, these values differ from the brake data in unmounted condition!

TYPE B20Q - 8 POLES

FOR MAINS VOLTAGE
400 V

Type	Stall torque (Δt=105°C) M_o Nm	Rated speed n 1/min	Rated power P_n W	Rated torque (Δt=105°C) M_n Nm	Peak torque M_{pk} Nm	Maximum speed n_{max} rpm	Moment of inertia J 10^{-4} Kgm^2	Peak torque acceleration a_{pk} rad/sec^2	Thermal time constant T_{th} min	Thermal protection threshold ϑ_{max} ° C	Voltage constant k_e Vs	Torque constant k_t Nm/A	Resistance phase to phase (20° C) R_w Ω	Inductance phase to phase L_w mH	B.E.M.F. at rated speed E_n Vrms	Stall current I_o Arms	Rated current I_n Arms	Power Connector Size
6000 min^{-1} - Self cooled																		
B20.D2Q	0.18	6000	95	0.15	0.6	6600	0.02	315789	7	140	0.17	0.29	29.1	22.1	107	0.62	0.52	8/-
B20.D3Q	0.32	6000	175	0.28	1.0	6600	0.03	333333	13	140	0.27	0.47	29.7	32.7	170	0.68	0.6	8/-

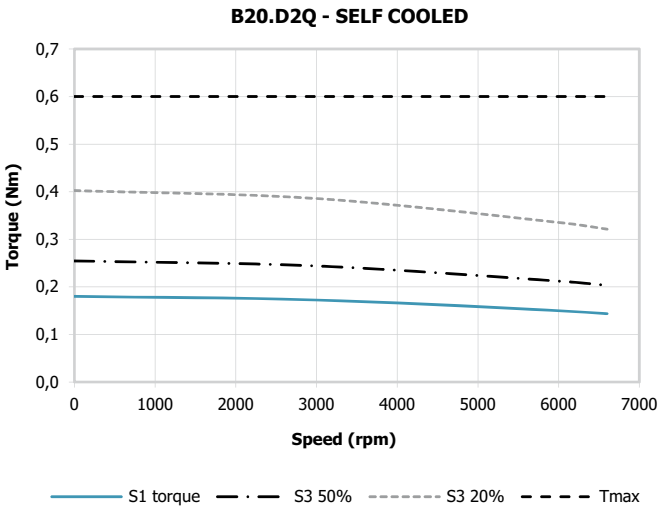

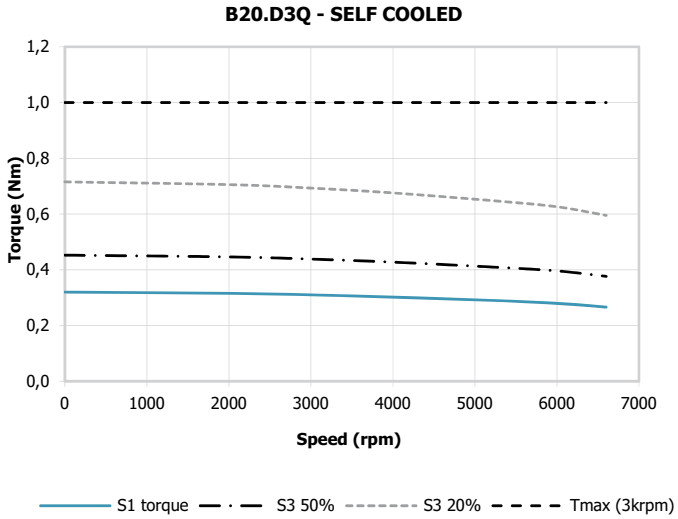

FOR MAINS VOLTAGE
400 V

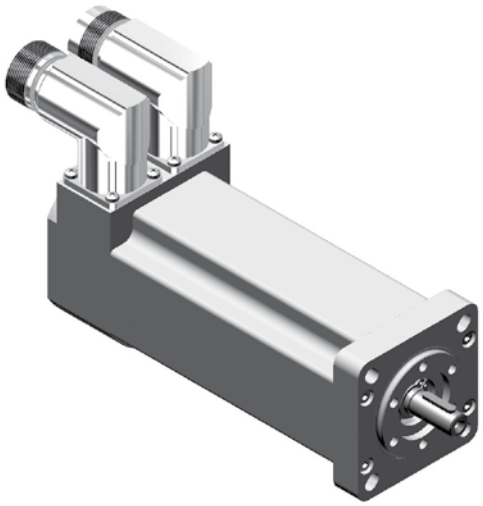

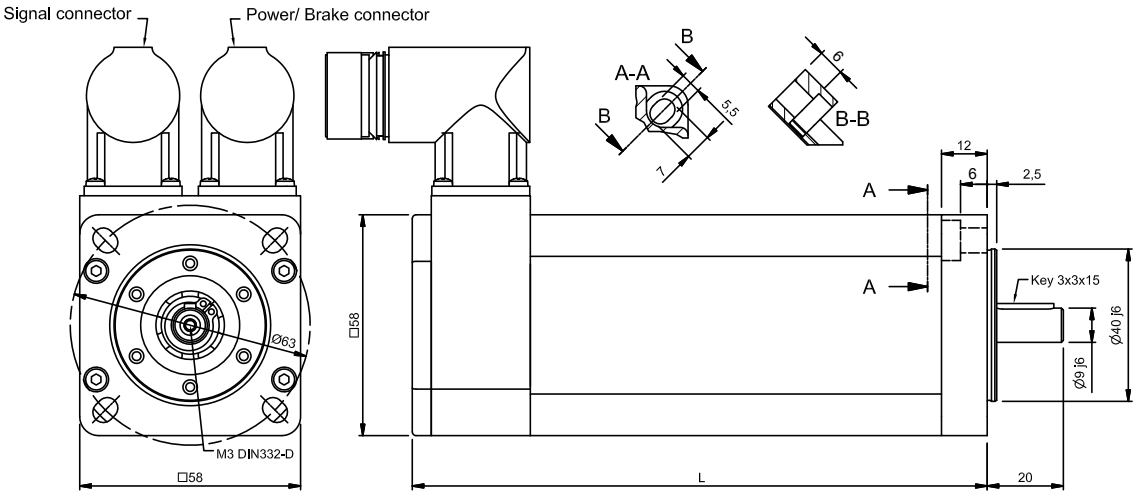

MECHANICAL DATA

Type	Torque Nm	Length with RESOLVER (L) Without brake	Length with RESOLVER (L) With brake	Maximum Length with ENCODER (L) Without brake	Maximum Length with ENCODER (L) With brake	Weight Kg Without brake	Weight Kg With brake
B28.D2Q	0.25	86.5	116.5	106.5	136.5	1.0	1.5
B28.D5Q	0.50	98.5	128.5	118.5	148.5	1.2	1.7
B28.D7Q	0.75	110.5	140.5	130.5	160.5	1.5	2.0
B28.01Q	1.00	122.5	152.5	142.5	172.5	1.7	2.2
B28.E2Q	1.25	134.5	164.5	154.5	184.5	2.0	2.5

BRAKE DATA

Brake data	Symbol	Data	Unit
Holding torque 100°C	Mbr	2.1	Nm
Voltage	Ubr	24	Vdc +/- 10%
Resistance	Rbr	70.6	Ohm
Electrical Power	Pbr	8.2	W
Current	Ibr	0.34	Adc
Additional* Rotor Inertia	Jbr	0.12	kgcm2
Opening (release) time	to max	30	ms
Closing (fall in) time	tc max	15	ms
Additional* Motor weight	mbr	0.5	kg

* Additional values are related to the motor data when the brake is mounted on the motor of the respective size, these values differ from the brake data in unmounted condition!

Base IP protection is IP54 on the A-side flange and IP65 on the motor body. Fully IP65 design available on request with additional motor length increasing.

TYPE B28Q - 8 POLES

FOR MAINS VOLTAGE
400 V

Type	Stall torque (Δt=105°C) M_o Nm	Rated speed n 1/min	Rated power P_n W	Rated torque (Δt=105°C) M_n Nm	Peak torque M_{pk} Nm	Maximum speed n_{max} rpm	Moment of inertia J 10^{-4} Kgm^2	Peak torque acceleration a_{pk} rad/sec^2	Thermal time constant T_{th} min	Thermal protection threshold ϑ_{max} ° C	Voltage constant k_e Vs	Torque constant k_t Nm/A	Resistance phase to phase (20° C) R_w Ω	Inductance phase to phase L_w mH	B.E.M.F. at rated speed E_n Vrms	Stall current I_o Arms	Rated current I_n Arms	Power Connector Size
3000 min^{-1} - Self cooled																		
B28.D5Q	0.50	3000	153.9	0.49	2.0	6600	0.13	153846	34	140	0.84	1.45	155.0	225.7	264	0.34	0.34	7/1
B28.D7Q	0.75	3000	229.3	0.73	3.0	6600	0.19	157895	36	140	0.84	1.45	118.2	150.0	264	0.52	0.50	7/1
B28.01Q	1.00	3000	304.7	0.97	4.0	6600	0.25	160000	38	140	0.84	1.45	61.5	72.9	264	0.69	0.67	7/1
B28.E2Q	1.25	3000	380.1	1.21	5.0	6600	0.31	161290	40	140	0.84	1.45	38.6	58.3	264	0.86	0.83	7/1
6000 min^{-1} - Self cooled																		
B28.D2Q	0.25	6000	151	0.24	1.0	6600	0.07	142857	31	140	0.42	0.73	110.0	128.8	264	0.34	0.33	7/1
B28.D5Q	0.50	6000	295	0.47	2.0	6600	0.13	153846	34	140	0.42	0.73	38.9	55.9	264	0.69	0.65	7/1
B28.D7Q	0.75	6000	440	0.70	3.0	6600	0.19	157895	36	140	0.42	0.73	24.2	38.8	264	1.03	0.96	7/1
B28.01Q	1.00	6000	584	0.93	4.0	6600	0.25	160000	38	140	0.42	0.73	12.5	17.9	264	1.37	1.28	7/1
B28.E2Q	1.25	6000	729	1.16	5.0	6600	0.31	161290	40	140	0.42	0.73	10.1	15.3	264	1.72	1.59	7/1

FOR MAINS VOLTAGE
400 V

B28.D2Q - SELF COOLED

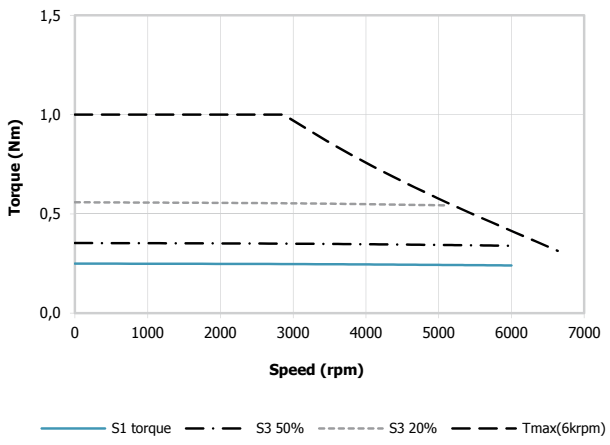

B28.D5Q - SELF COOLED

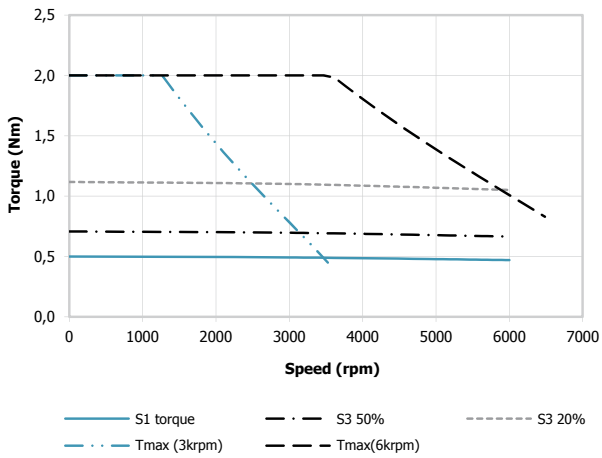

B28.D7Q - SELF COOLED

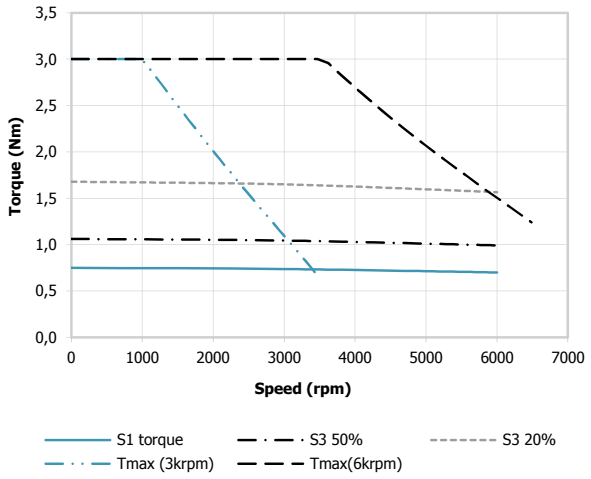

B28.01Q - SELF COOLED

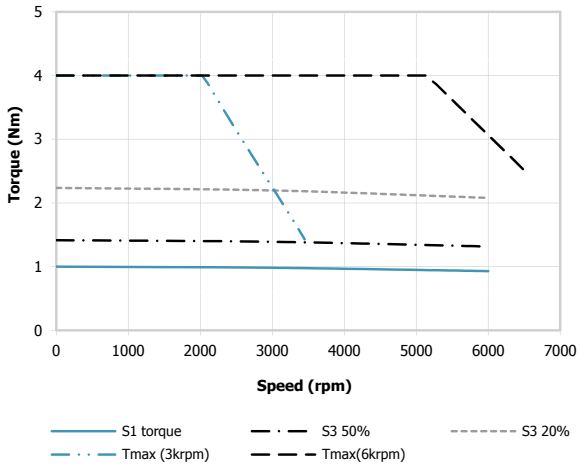

B28.E2Q - SELF COOLED

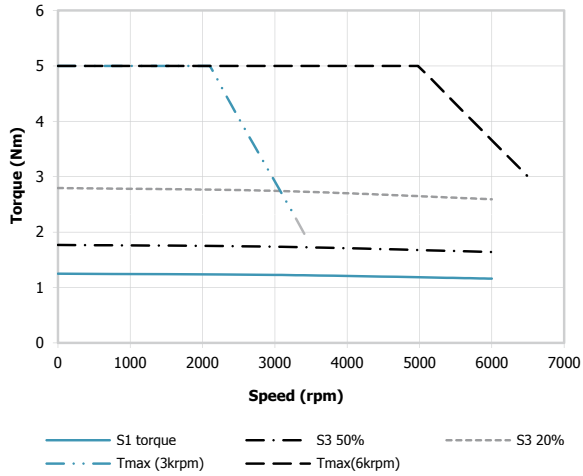

TYPE B30J - 10 POLES

FOR MAINS VOLTAGE
400 V

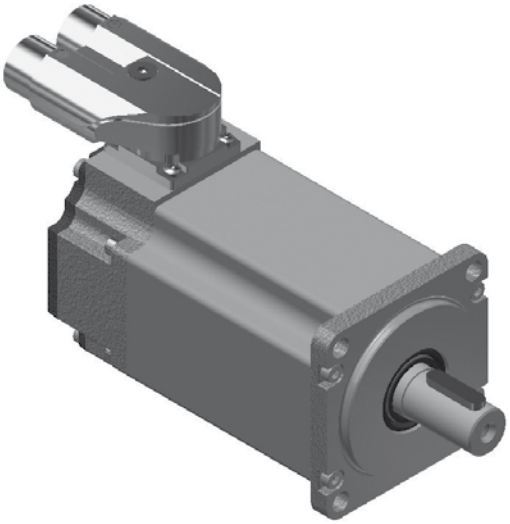

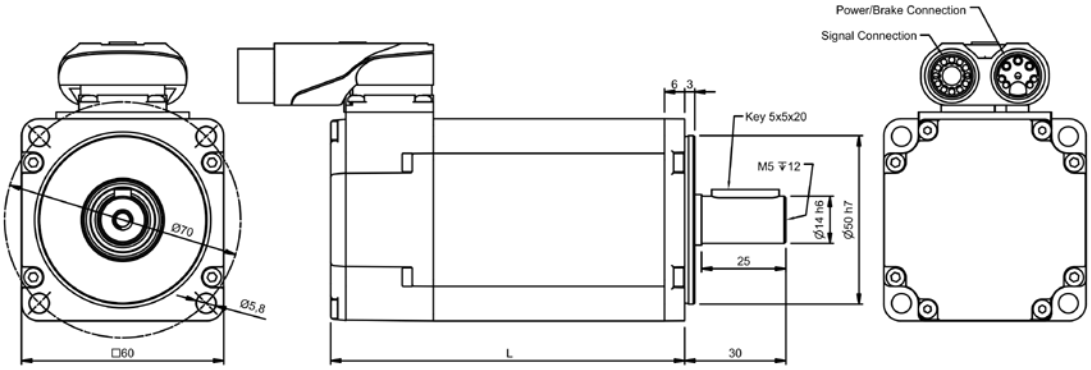

MECHANICAL DATA

Type	Torque Nm	Length with RESOLVER (L) Without brake	Length with RESOLVER (L) With brake	Maximum Length with ENCODER (L) Without brake	Maximum Length with ENCODER (L) With brake	Weight Kg Without brake	Weight Kg With brake
B30.D7J	0.7	84.5	113.5	107.5	136.5	0.8	1.4
B30.E4J	1.4	105	134	128	157	1.1	1.7

BRAKE DATA

Brake data	Symbol	Data	Unit
Holding torque 100°C	Mbr	2.1	Nm
Voltage	Ubr	24	Vdc +/- 10%
Resistance	Rbr	70.6	Ohm
Electrical Power	Pbr	8.2	W
Current	Ibr	0.34	Adc
Additional* Rotor Inertia	Jbr	0.12	kgcm2
Opening (release) time	to max	30	ms
Closing (fall in) time	tc max	15	ms
Additional* Motor weight	mbr	0.6	kg

* Additional values are related to the motor data when the brake is mounted on the motor of the respective size, these values differ from the brake data in unmounted condition!

FOR MAINS VOLTAGE
400 V

Type	Stall torque (Δt=105°C) M_o Nm	Rated speed n 1/min	Rated power P_n W	Rated torque (Δt=105°C) M_n Nm	Peak torque M_{pk} Nm	Maximum speed n_{max} rpm	Moment of inertia J 10^{-4} Kgm^2	Peak torque acceleration a_{pk} rad/sec^2	Thermal time constant T_{th} min	Thermal protection threshold ϑ_{max} ° C	Voltage constant k_e Vs	Torque constant k_t Nm/A	Resistance phase to phase (20° C) R_w Ω	Inductance phase to phase L_w mH	B.E.M.F. at rated speed E_n Vrms	Stall current I_o Arms	Rated current I_n Arms	Power Connector Size
6000 min^{-1} - Self cooled																		
B30.D7J	0.7	6000	380	0.6	2.0	6600	0.22	100000	18	140	0.47	0.81	26.7	26.9	296	0.86	0.74	8/-
B30.E4J	1.4	6000	700	1.1	4.8	6600	0.41	117073	20	140	0.47	0.81	9.9	12.9	296	1.72	1.35	8/-

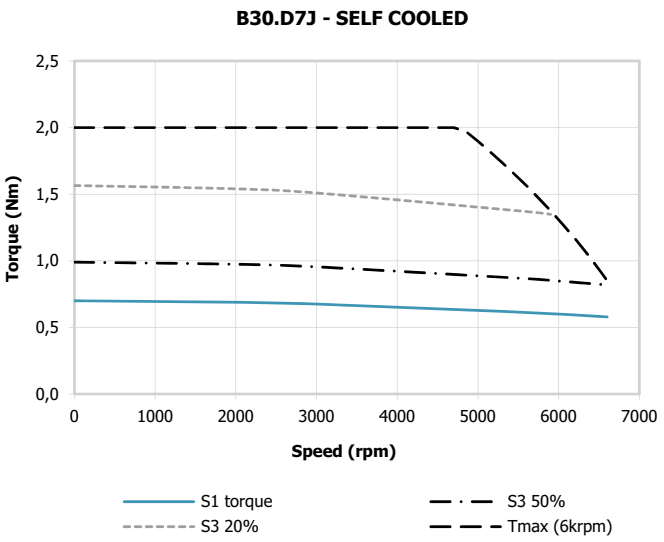

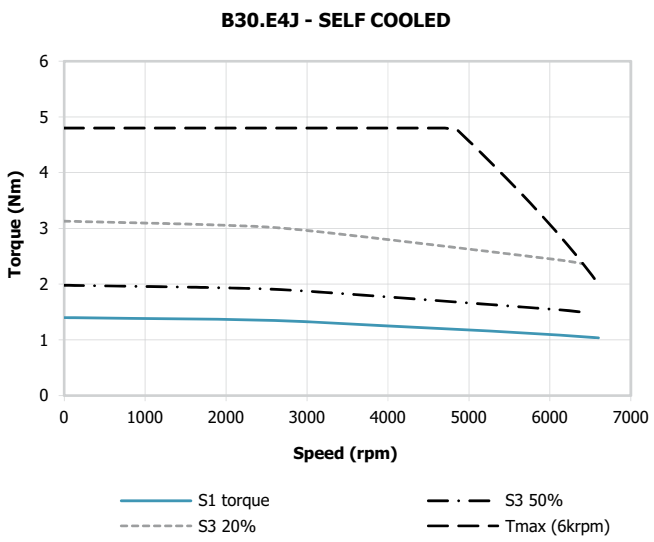

TYPE B36Q - 8 POLES

FOR MAINS VOLTAGE
400 V

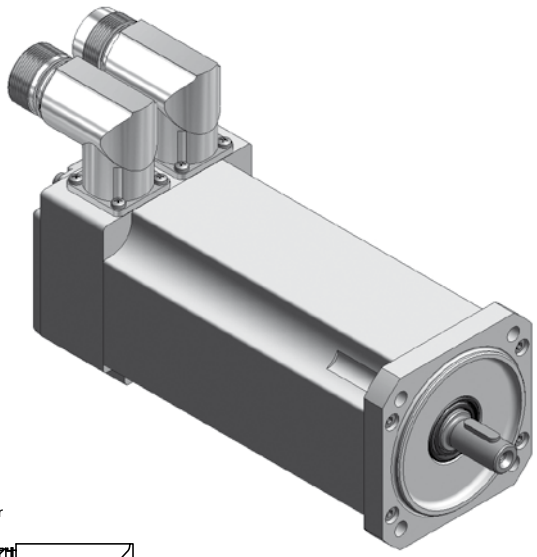

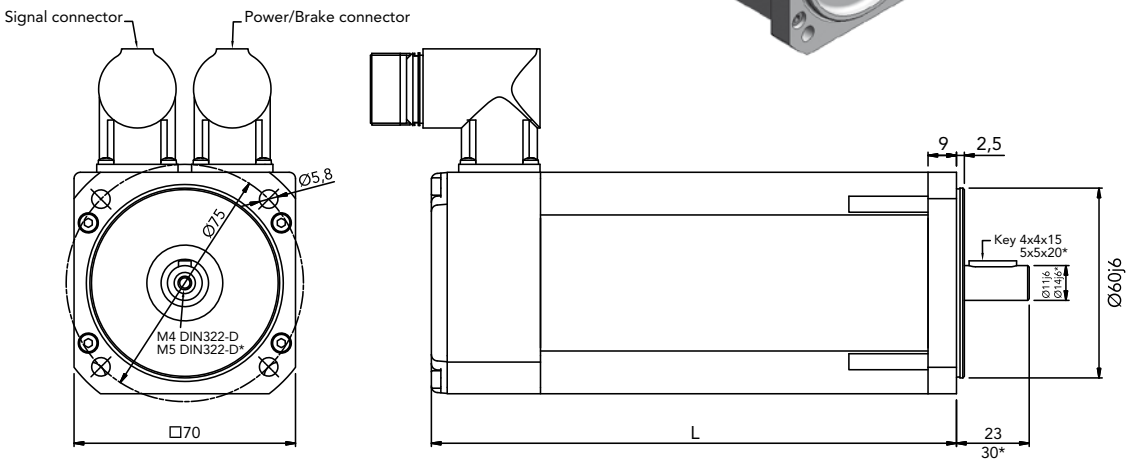

* Only for type B36.F4Q, B36.O3Q

MECHANICAL DATA

Type	Torque Nm	Length with RESOLVER (L) Without brake	Length with RESOLVER (L) With brake	Maximum Length with ENCODER (L) Without brake	Maximum Length with ENCODER (L) With brake	Weight Kg Without brake	Weight Kg With brake
B36.D6Q	0.6	112	147	123	158	2.0	2.6
B36.E2Q	1.2	127	162	138	173	2.2	2.8
B36.E8Q	1.8	142	177	153	188	2.6	3.2
B36.F4Q	2.4	167	198	180	211	3.6	4.2
B36.03Q	3.0	182	213	195	226	3.8	4.4

BRAKE DATA

Brake data	Symbol	Data	Unit
Holding torque 100°C	Mbr	3.2	Nm
Voltage	Ubr	24	Vdc +/- 10%
Resistance	Rbr	53.2	Ohm
Electrical Power	Pbr	10.8	W
Current	Ibr	0.45	Adc
Additional* Rotor Inertia	Jbr	0.38	kgcm2
Opening (release) time	to max	60	ms
Closing (fall in) time	tc max	10	ms
Additional* Motor weight	mbr	0.35	kg

* Additional values are related to the motor data when the brake is mounted to the motor of the respective size, these values differ from the brake data in unmounted condition!

TYPE B36Q - 8 POLES

FOR MAINS VOLTAGE
400 V

Type	Stall torque (Δt=105°C) M_o Nm	Rated speed n 1/min	Rated power P_n W	Rated torque (Δt=105°C) M_n Nm	Peak torque M_{pk} Nm	Maximum speed n_{max} rpm	Moment of inertia J 10^{-4} Kgm^2	Peak torque acceleration a_{pk} rad/sec^2	Thermal time constant T_{th} min	Thermal protection threshold ϑ_{max} ° C	Voltage constant k_e Vs	Torque constant k_t Nm/A	Resistance phase to phase (20° C) R_w Ω	Inductance phase to phase L_w mH	B.E.M.F. at rated speed E_n Vrms	Stall current I_o Arms	Rated current I_n Arms	Power Connector Size
3000 min^{-1} - Self cooled																		
B36.D6Q	0.6	3000	172.8	0.55	2.1	6600	0.25	84000	30	140	0.84	1.45	105.0	144.0	264	0.4	0.4	7/1
B36.E2Q	1.2	3000	345.6	1.10	4.2	6600	0.44	95455	32	140	0.84	1.45	36.2	69.6	264	0.8	0.8	7/1
B36.E8Q	1.8	3000	518.4	1.65	6.3	6600	0.63	100000	34	140	0.84	1.45	20.0	46.4	264	1.2	1.1	7/1
B36.F4Q	2.4	3000	691.2	2.20	8.5	6600	1.05	80952	36	140	0.84	1.45	15.0	36.0	264	1.7	1.5	7/1
B36.03Q	3.0	3000	848	2.70	10.5	6600	1.22	86066	38	140	0.84	1.45	11.1	28.0	264	2.1	1.9	7/1
6000 min^{-1} - Self cooled																		
B36.D6Q	0.6	6000	314.2	0.5	2.1	6600	0.25	84000	30	140	0.42	0.73	26.3	36.1	264	0.8	0.7	7/1
B36.E2Q	1.2	6000	628.0	1.0	4.2	6600	0.44	95455	32	140	0.42	0.73	9.04	17.4	264	1.6	1.4	7/1
B36.E8Q	1.8	6000	942.5	1.5	6.3	6600	0.63	100000	34	140	0.42	0.73	5.25	11.6	264	2.5	2.1	7/1
B36.F4Q	2.4	6000	1225	2.0	8.5	6600	1.05	80952	36	140	0.42	0.73	3.75	9.0	264	3.3	2.7	7/1
B36.03Q	3.0	6000	1508	2.4	10.5	6600	1.22	86066	38	140	0.42	0.73	2.77	7.0	264	4.1	3.3	7/1

FOR MAINS VOLTAGE
400 V

B36.D6Q - SELF COOLED

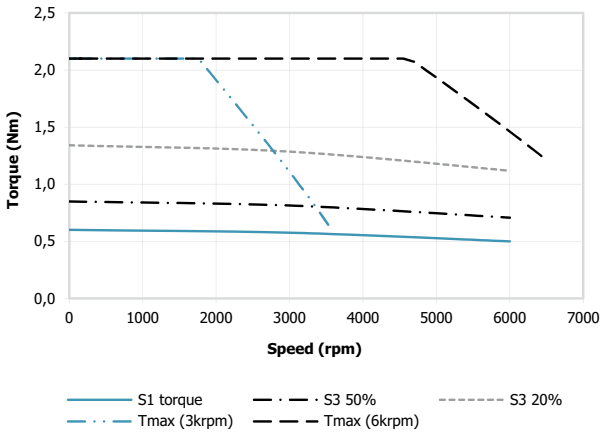

B36.E2Q - SELF COOLED

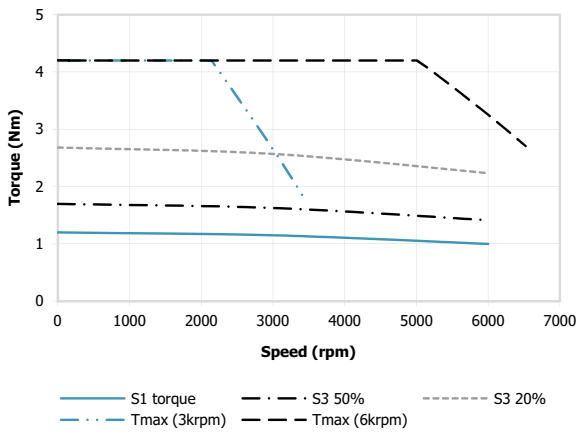

B36.E8Q - SELF COOLED

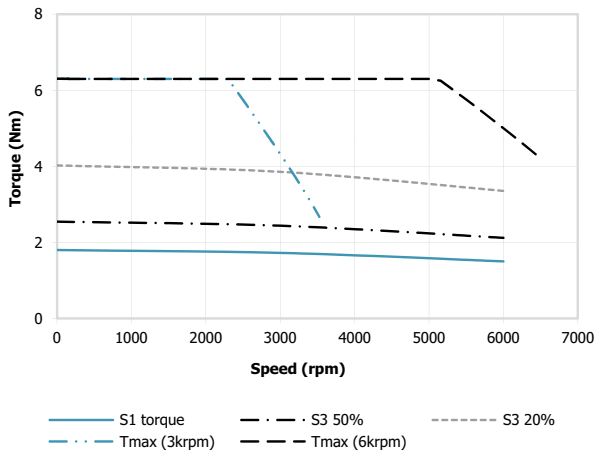

B36.F4Q - SELF COOLED

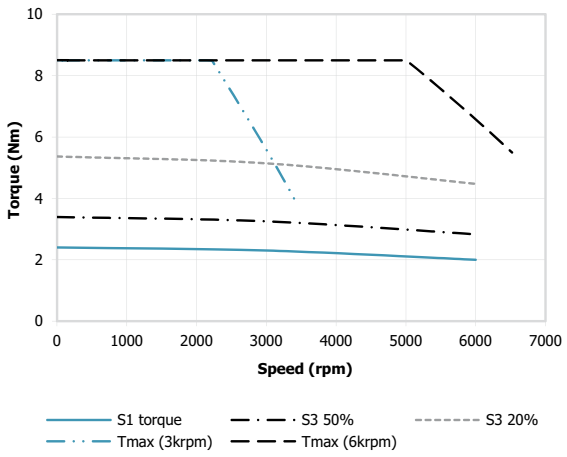

B36.03Q - SELF COOLED

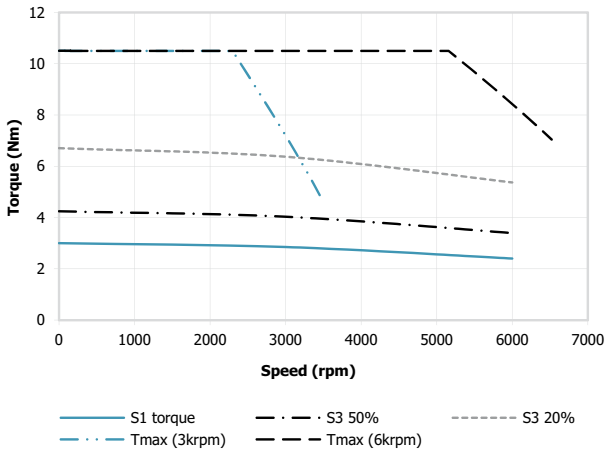

FOR MAINS VOLTAGE
400 V

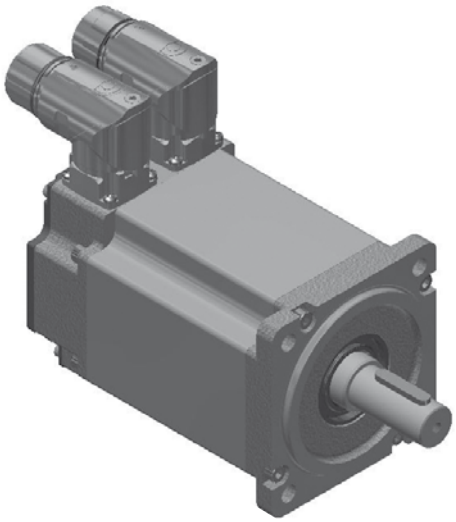

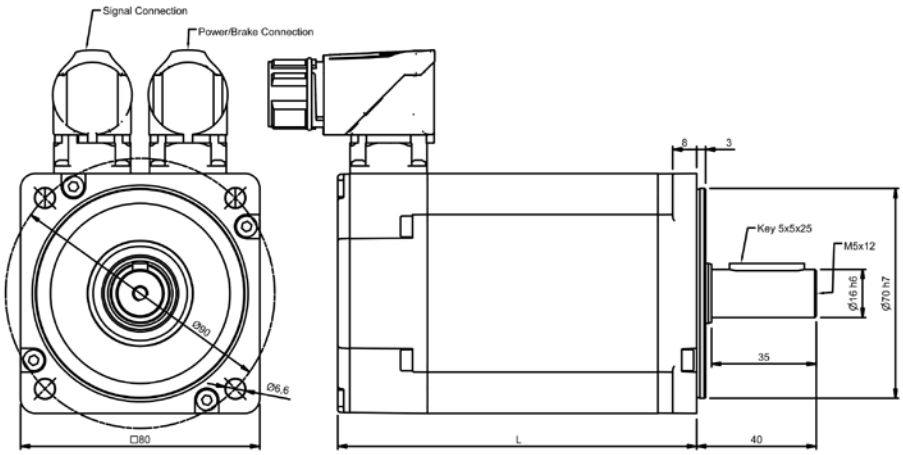

MECHANICAL DATA

Type	Torque Nm	Length with RESOLVER (L) Without brake	Length with RESOLVER (L) With brake	Maximum Length with ENCODER (L) Without brake	Maximum Length with ENCODER (L) With brake	Weight Kg Without brake	Weight Kg With brake
B40.D7J	0.7	86	116	109	139	1.7	2.3
B40.E4J	1.4	97.5	127.5	120.5	150.5	2.1	2.7
B40.F7J	2.7	120	150	143	173	2.6	3.2

BRAKE DATA

Brake data	Symbol	Data	Unit
Holding torque 100°C	Mbr	3.2	Nm
Voltage	Ubr	24	Vdc +/- 10%
Resistance	Rbr	53.2	Ohm
Electrical Power	Pbr	10.8	W
Current	Ibr	0.45	Adc
Additional* Rotor Inertia	Jbr	0.38	$kgcm^2$
Opening (release) time	to max	60	ms
Closing (fall in) time	tc max	10	ms
Additional* Motor weight	mbr	0.6	kg

* Additional values are related to the motor data when the brake is mounted on the motor of the respective size, these values differ from the brake data in unmounted condition!

FOR MAINS VOLTAGE
400 V

Type	Stall torque (Δt=105°C) M_o Nm	Rated speed n 1/min	Rated power P_n W	Rated torque (Δt=105°C) M_n Nm	Peak torque M_{pk} Nm	Maximum speed n_{max} rpm	Moment of inertia J 10^{-4} Kgm²	Peak torque acceleration a_{pk} rad/sec²	Thermal time constant T_{th} min	Thermal protection threshold ϑ_{max} ° C	Voltage constant k_e Vs	Torque constant k_t Nm/A	Resistance phase to phase (20° C) R_w Ω	Inductance phase to phase L_w mH	B.E.M.F. at rated speed E_n Vrms	Stall current I_o Arms	Ratedr current I_n Arms	Peak current Ipk Arms	Powe Connector Size
3000 min⁻¹ - Self cooled																			
B40.E4J	1.4	3000	380	1.2	4.2	6600	1.13	37168	17	140	0.94	1.63	30.0	39.5	296	0.86	0.74	2.9	7/1
B40.F7J	2.7	3000	700	2.4	8.5	6600	1.73	49133	20	140	0.94	1.63	12.2	19.8	296	1.66	1.47	5.8	7/1
6000 min⁻¹ - Self cooled																			
B40.D7J	0.7	6000	250	0.4	2.0	6600	0.83	24096	15	140	0.47	0.81	18.4	16.5	296	0.86	0.49	2.9	7/1
B40.E4J	1.4	6000	550	0.9	4.2	6600	1.13	37168	17	140	0.47	0.81	7.6	9.9	296	1.72	1.11	5.8	7/1
B40.F7J	2.7	6000	1200	1.9	8.5	6600	1.73	49133	20	140	0.47	0.81	2.9	5.1	296	3.31	2.33	11.6	7/1

B40.D7J - SELF COOLED

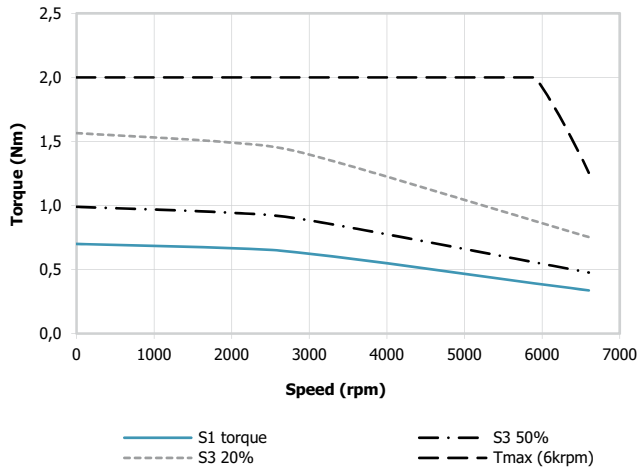

B40.E4J - SELF COOLED

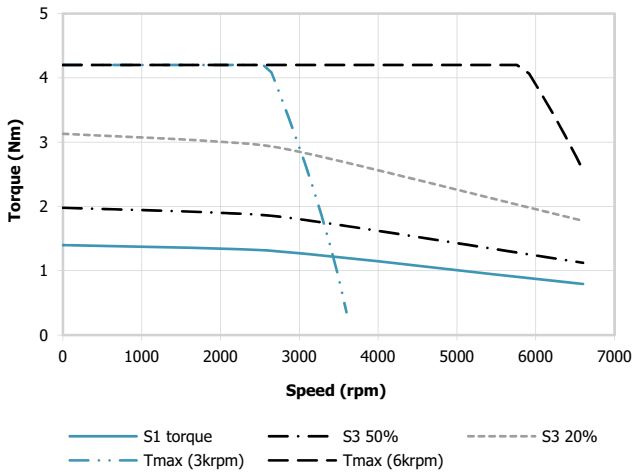

B40.F7J - SELF COOLED

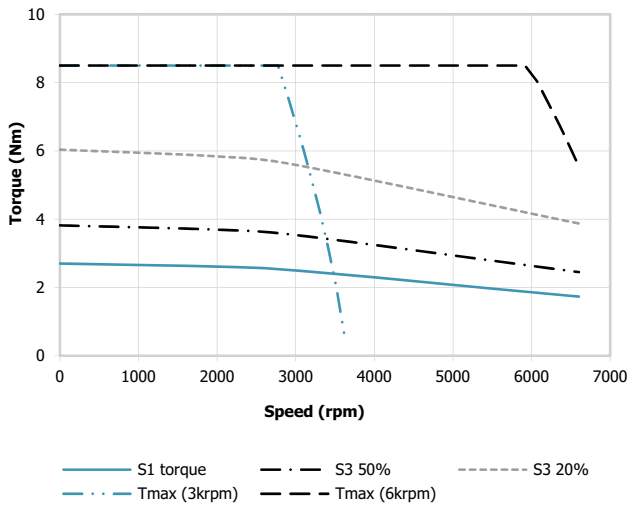

FOR MAINS VOLTAGE
400 V

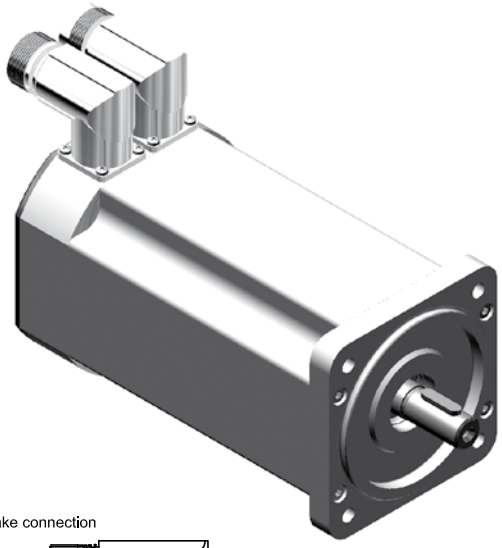

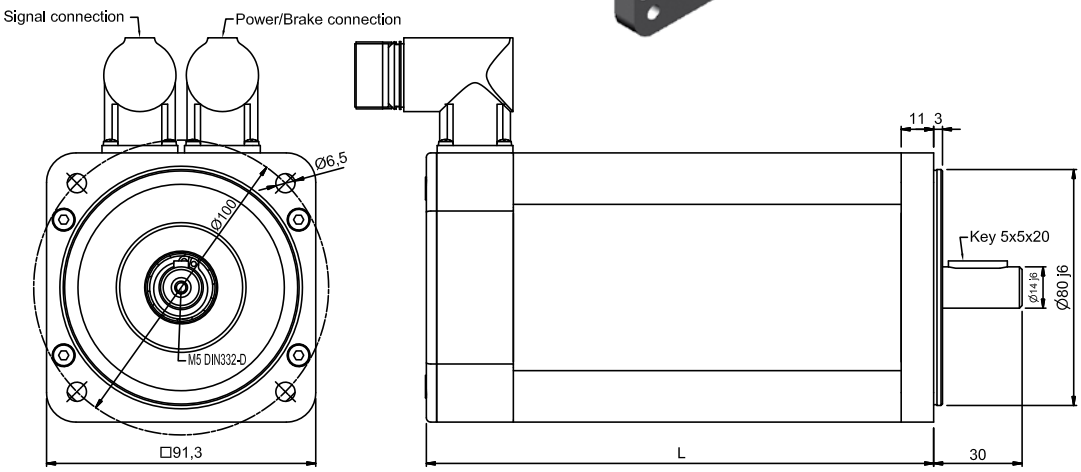

MECHANICAL DATA

Type	Torque Nm	Length with RESOLVER (L) Without brake	Length with RESOLVER (L) With brake	Maximum Length with ENCODER (L) Without brake	Maximum Length with ENCODER (L) With brake	Weight Kg Without brake	Weight Kg With brake
B56.E3Q	1.35	122	157	137	172	3.5	4.1
B56.F6Q	2.6	145	180	159	194	4.4	5.0
B56.G5Q	3.5	160	195	174	209	5.0	5.6
B56.H5Q	4.5	180	215	194	229	5.8	6.4

BRAKE DATA

Brake data	Symbol	Data	Unit
Holding torque 100°C	Mbr	3.5	Nm
Voltage	Ubr	24	Vdc +/- 10%
Resistance	Rbr	53.2	Ohm
Electrical Power	Pbr	10.8	W
Current	Ibr	0.45	Adc
Additional* Rotor Inertia	Jbr	0.38	kgcm2
Opening (release) time	to max	60	ms
Closing (fall in) time	tc max	10	ms
Additional* Motor weight	mbr	0.6	kg

* Additional values are related to the motor data when the brake is mounted on the motor of the respective size, these values differ from the brake data in unmounted condition!

TYPE B56Q - 8 POLES

FOR MAINS VOLTAGE
400 V

Type	Stall torque (Δt=105°C) M_o Nm	Rated speed n 1/min	Rated power P_n kW	Rated torque (Δt=105°C) M_n Nm	Peak torque M_{pk} Nm	Maximum speed n_{max} rpm	Moment of inertia J 10^{-4} Kgm^2	Peak torque acceleration a_{pk} rad/sec^2	Thermal time constant T_{th} min	Thermal protection threshold ϑ_{max} ° C	Voltage constant k_e Vs	Torque constant k_t Nm/A	Resistance phase to phase (20° C) R_w Ω	Inductance phase to phase L_w mH	B.E.M.F. at rated speed E_n Vrms	Stall current I_o Arms	Rated current I_n Arms	Power Connector Size
3000 min^{-1} - Self cooled																		
B56.E3Q	1.35	3000	0.4	1.3	5	6600	0.47	106383	31	140	0.94	1.63	37.4	137	296	0.8	0.8	7/1
B56.F6Q	2.6	3000	0.8	2.5	10	6600	0.88	113636	34	140	0.94	1.63	15.9	73.7	296	1.6	1.5	7/1
B56.G5Q	3.5	3000	1.0	3.1	14	6600	1.09	128440	36	140	0.94	1.63	10.7	54.7	296	2.1	1.9	7/1
B56.H5Q	4.5	3000	1.2	3.9	18	6600	1.40	128571	39	140	0.94	1.63	6.9	43.7	296	2.8	2.4	7/1
6000 min^{-1} - Self cooled																		
B56.E3Q	1.35	6000	0.6	1.0	5	6600	0.47	106383	31	140	0.47	0.81	9.4	33.8	296	1.7	1.2	7/1
B56.F6Q	2.6	6000	1.1	1.7	10	6600	0.88	113636	34	140	0.47	0.81	3.2	18.2	296	3.2	2.1	7/1
B56.G5Q	3.5	6000	1.3	2.0	14	6600	1.09	128440	36	140	0.47	0.81	2.7	13.5	296	4.3	2.5	7/1
B56.H5Q	4.5	6000	1.4	2.3	18	6600	1.40	128571	39	140	0.47	0.81	1.8	10.8	296	5.6	2.8	7/1

FOR MAINS VOLTAGE
400 V

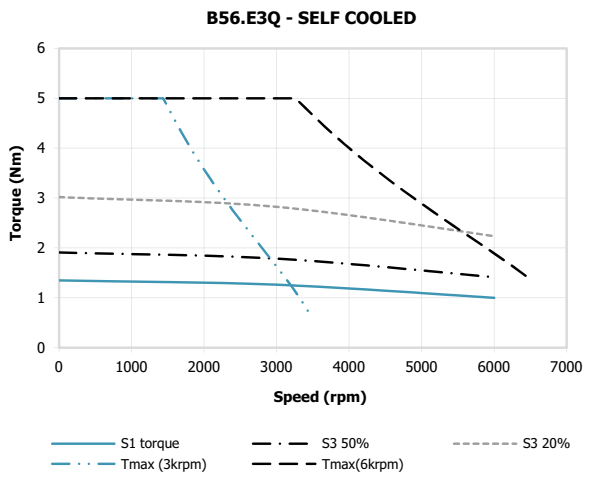

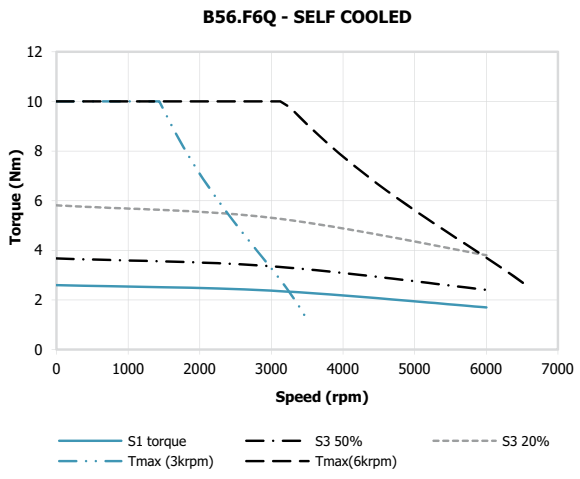

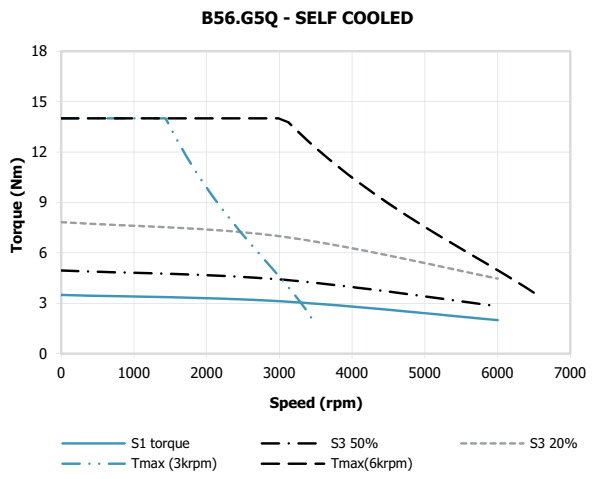

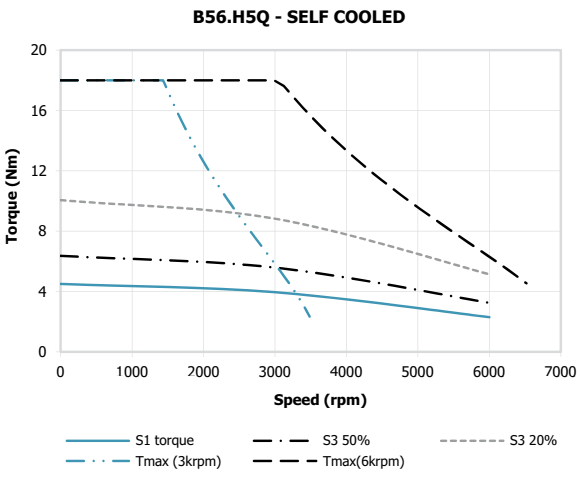

FOR MAINS VOLTAGE
400 V

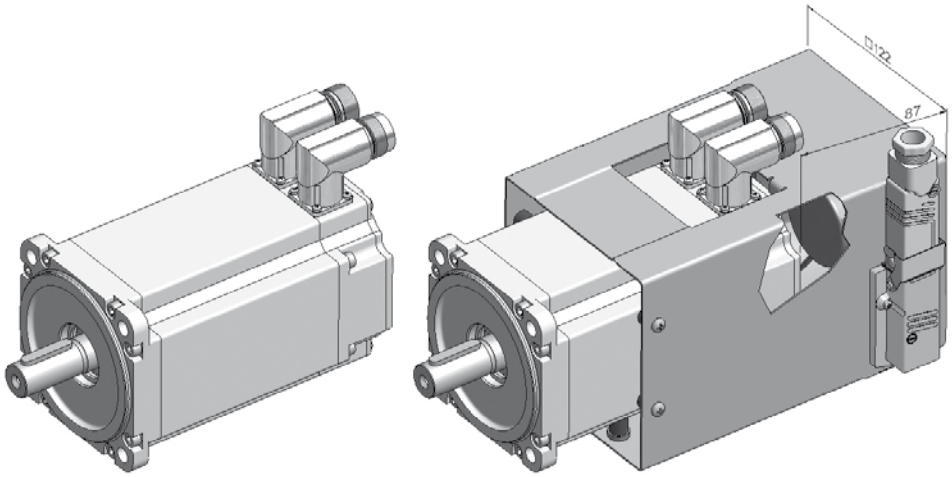

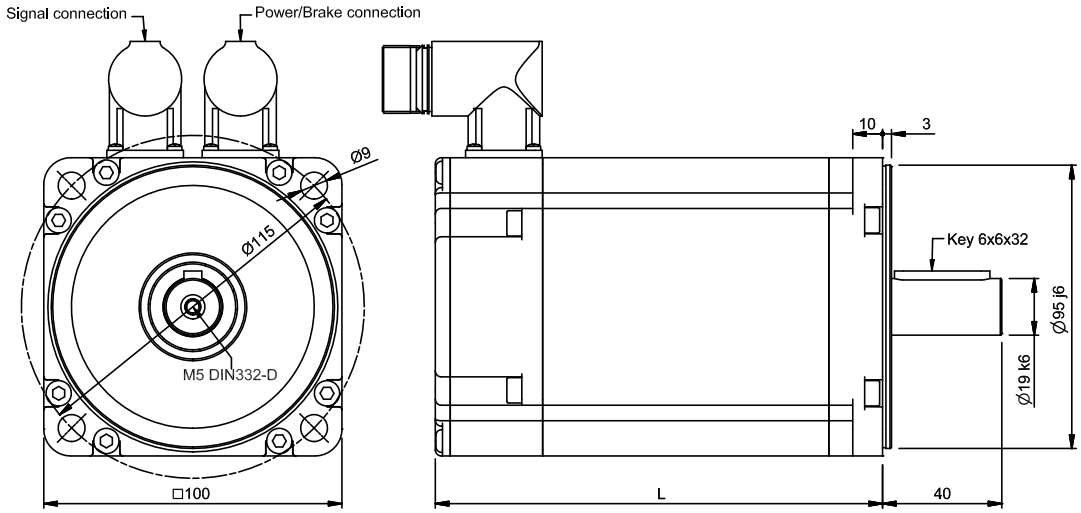

MECHANICAL DATA

Type	Torque Nm	Length with RESOLVER (L) Without brake	Length with RESOLVER (L) With brake	Maximum Length with ENCODER (L) Without brake	Maximum Length with ENCODER (L) With brake	Weight Kg Without brake	Weight Kg With brake
B63.04Q	4	150	182	161	193	4.7	5.6
B63.06Q	6	170	203	181	214	5.3	6.1
B63.08Q	8	194	226	205	237	6.2	7.1
B63.10Q	10	214	246	225	257	7.2	8.1

BRAKE DATA

Brake data	Symbol	Data	Unit
Holding torque 100°C	Mbr	8	Nm
Voltage	Ubr	24	Vdc +/- 10%
Resistance	Rbr	29	Ohm
Electrical Power	Pbr	19.9	W
Current	Ibr	0.83	Adc
Additional* Rotor Inertia	Jbr	0.69	kgcm2
Opening (release) time	to max	55	ms
Closing (fall in) time	tc max	38	ms
Additional* Motor weight	mbr	0.89	kg

* Additional values are related to the motor data when the brake is mounted to the motor of the respective size, these values differ from the brake data in unmounted condition!

FOR MAINS VOLTAGE
400 V

Type	Stall torque (Δt=105°C) M_o Nm	Rated speed n 1/min	Rated power P_n kW	Rated torque (Δt=105°C) M_n Nm	Peak torque M_{pk} Nm	Maximum speed n_{max} rpm	Moment of inertia J 10^{-4} Kgm²	Peak torque acceleration a_{pk} rad/sec²	Thermal time constant T_{th} min	Thermal protection threshold ϑ_{max} ° C	Voltage constant k_e Vs	Torque constant k_t Nm/A	Resistance phase to phase (20° C) R_w Ω	Inductance phase to phase L_w mH	B.E.M.F. at rated speed E_n Vrms	Stall current I_o Arms	Rated current I_n Arms	Power Connector Size
3000 min⁻¹ - Self Cooled																		
B63.04Q	4	3000	1.1	3.50	12	6600	1.87	64171	25	140	0.94	1.63	5.40	36.5	296	2.5	2.1	7/1
B63.06Q	6	3000	1.6	5.25	18	6600	2.67	67416	30	140	0.94	1.63	3.50	24.0	296	3.7	3.2	7/1
B63.08Q	8	3000	2.4	7.50	24	6600	3.47	69164	30	140	0.94	1.63	2.50	21.8	296	4.9	4.6	7/1
B63.10Q	10	3000	2.7	8.75	30	6600	4.27	70258	35	140	0.94	1.63	1.90	17.4	296	6.1	5.4	7/1
4500 min⁻¹ - Self Cooled																		
B63.04Q	4	4500	1.5	3.10	12	6600	1.87	64171	25	140	0.63	1.09	2.60	16.5	296	3.7	2.9	7/1
B63.06Q	6	4500	2.2	4.65	18	6600	2.67	67416	30	140	0.63	1.09	1.50	10.8	296	5.5	4.3	7/1
B63.08Q	8	4500	2.9	6.20	24	6600	3.47	69164	30	140	0.63	1.09	1.10	9.70	296	7.4	5.7	7/1
B63.10Q	10	4500	3.6	7.70	30	6600	4.27	70258	35	140	0.63	1.09	0.84	7.80	296	9.2	7.1	7/1
6000 min - Self Cooled																		
B63.04Q	4	6000	1.5	2.40	12	6600	1.87	64171	25	140	0.47	0.81	1.35	9.13	296	4.9	2.9	7/1
B63.06Q	6	6000	2.3	3.60	18	6600	2.67	67416	30	140	0.47	0.81	0.88	6.00	296	7.4	4.4	7/1
B63.08Q	8	6000	3.0	4.80	24	6600	3.47	69164	30	140	0.47	0.81	0.63	5.45	296	9.8	5.9	7/1
B63.10Q	10	6000	3.8	6.00	30	6600	4.27	70258	35	140	0.47	0.81	0.48	4.35	296	12.3	7.4	7/1

Type	Stall torque (Δt=105°C) M_o Nm	Rated speed n 1/min	Rated power P_n kW	Rated torque (Δt=105°C) M_n Nm	Peak torque M_{pk} Nm	Maximum speed n_{max} rpm	Moment of inertia J 10^{-4} Kgm²	Peak torque acceleration a_{pk} rad/sec²	Thermal time constant T_{th} min	Thermal protection threshold ϑ_{max} ° C	Voltage constant k_e Vs	Torque constant k_t Nm/A	Resistance phase to phase (20° C) R_w Ω	Inductance phase to phase L_w mH	B.E.M.F. at rated speed E_n Vrms	Stall current I_o Arms	Rated current I_n Arms	Power Connector Size
3000 min⁻¹ - Air Cooled																		
B63.04Q	4.8	3000	1.4	4.4	12	6600	1.87	64171	25	140	0.94	1.63	5.40	36.5	296	2.9	2.7	7/1
B63.06Q	7.4	3000	2.1	6.8	18	6600	2.67	67416	30	140	0.94	1.63	3.50	24.0	296	4.5	4.2	7/1
B63.08Q	10.1	3000	2.9	9.4	24	6600	3.47	69164	30	140	0.94	1.63	2.50	21.8	296	6.2	5.8	7/1
B63.10Q	13.0	3000	3.7	11.8	30	6600	4.27	70258	35	140	0.94	1.63	1.90	17.4	296	8.0	7.2	7/1
4500 min⁻¹ - Air Cooled																		
B63.04Q	4.8	4500	1.9	4.0	12	6600	1.87	64171	25	140	0.63	1.09	2.60	16.5	296	4.4	3.7	7/1
B63.06Q	7.4	4500	2.9	6.2	18	6600	2.67	67416	30	140	0.63	1.09	1.50	10.8	296	6.8	5.7	7/1
B63.08Q	10.1	4500	4.0	8.4	24	6600	3.47	69164	30	140	0.63	1.09	1.10	9.70	296	9.3	7.8	7/1
B63.10Q	13.0	4500	5.0	10.7	30	6600	4.27	70258	35	140	0.63	1.09	0.84	7.80	296	12.0	9.8	7/1
6000 min⁻¹ - Air Cooled																		
B63.04Q	4.8	6000	2.1	3.3	12	6600	1.87	64171	25	140	0.47	0.81	1.35	9.13	296	5.9	4.0	7/1
B63.06Q	7.4	6000	3.1	5.0	18	6600	2.67	67416	30	140	0.47	0.81	0.88	6.00	296	9.1	6.1	7/1
B63.08Q	10.1	6000	4.3	6.8	24	6600	3.47	69164	30	140	0.47	0.81	0.63	5.45	296	12.4	8.4	7/1
B63.10Q	13.0	6000	5.5	8.7	30	6600	4.27	70258	35	140	0.47	0.81	0.48	4.35	296	16.0	10.7	7/1

FOR MAINS VOLTAGE
400 V

B63.04Q - SELF COOLED

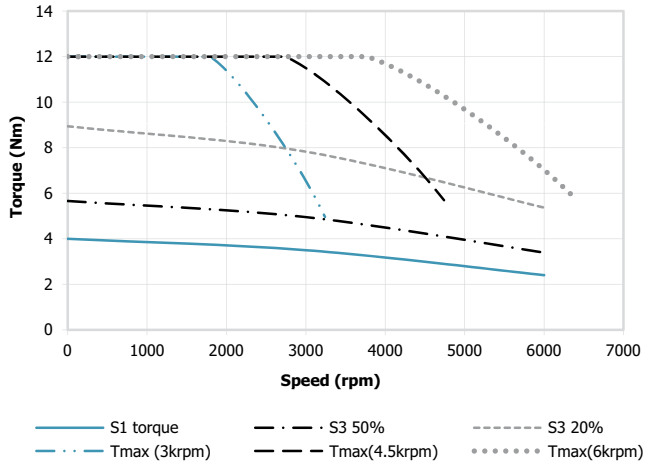

B63.06Q - SELF COOLED

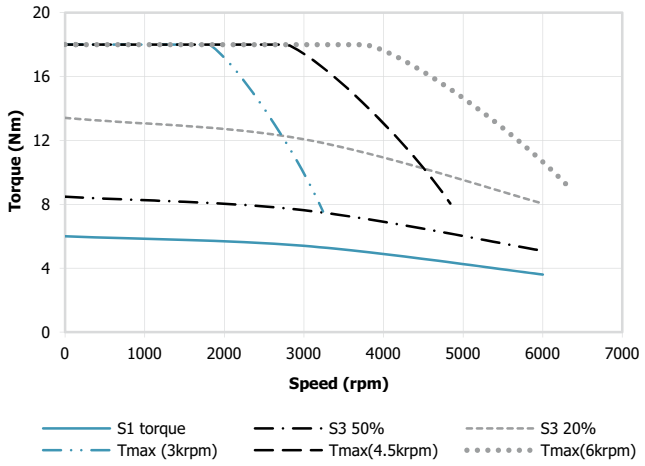

B63.08Q - SELF COOLED

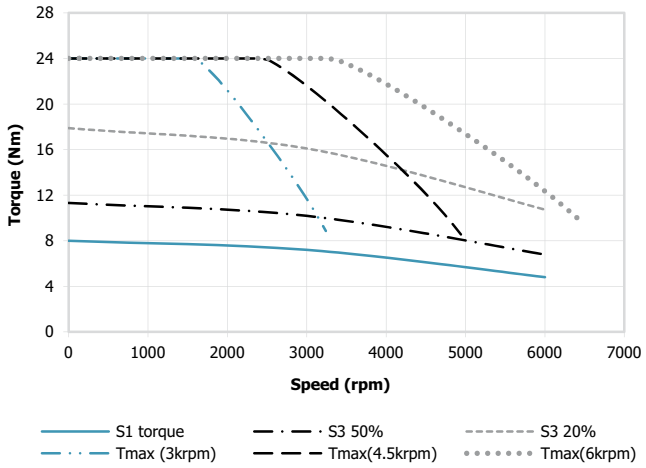

B63.10Q - SELF COOLED

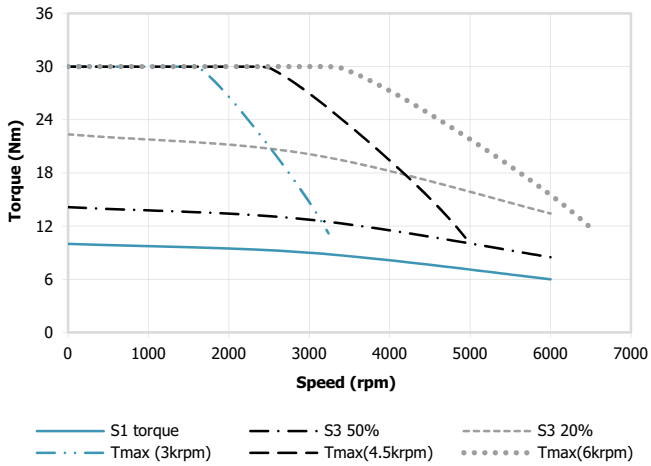

FOR MAINS VOLTAGE
400 V

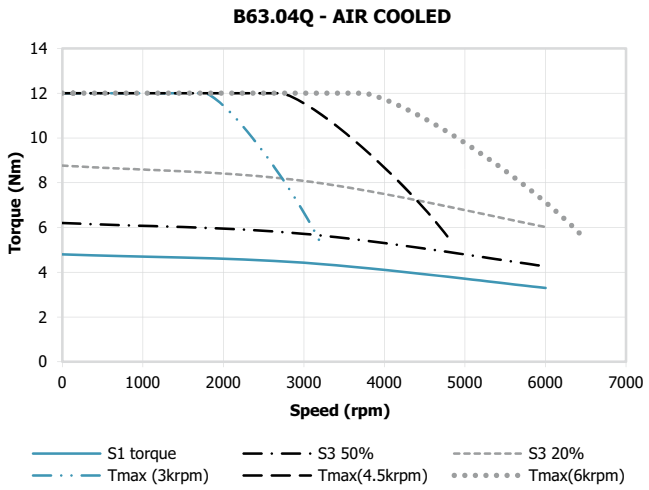

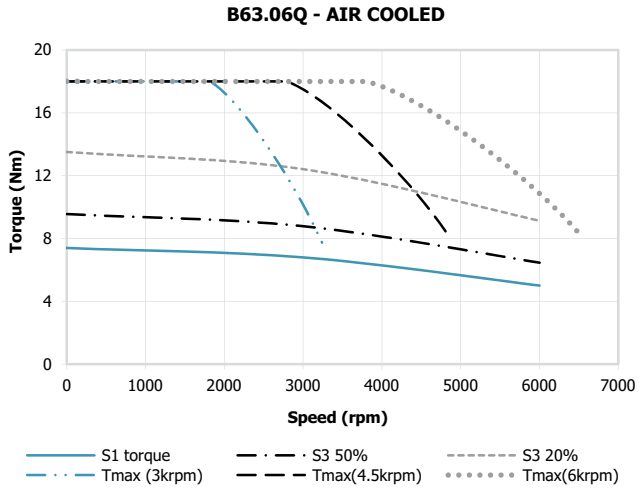

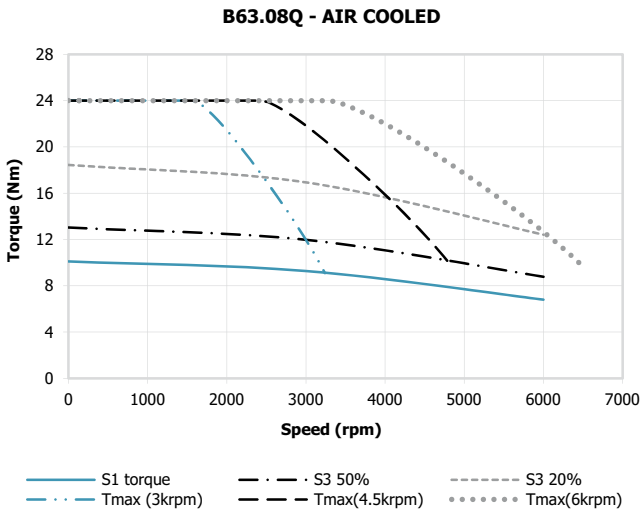

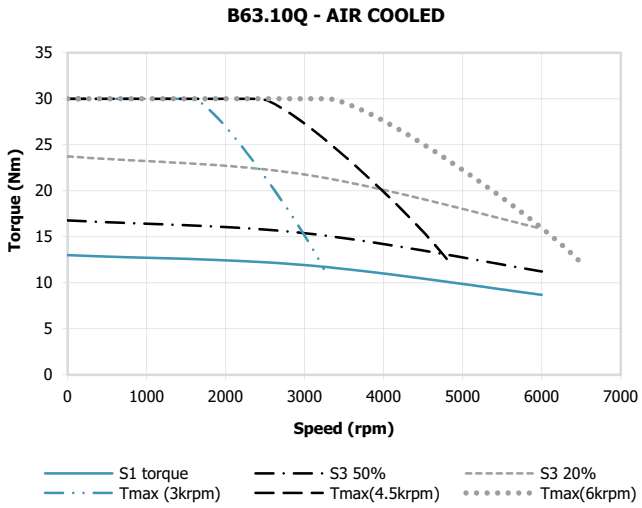

TYPE B63Y - 10 POLES

FOR MAINS VOLTAGE
400 V

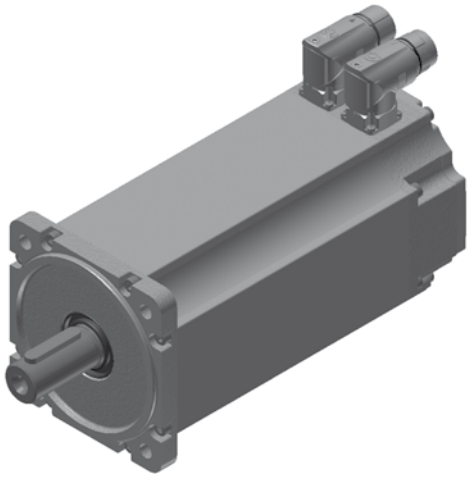

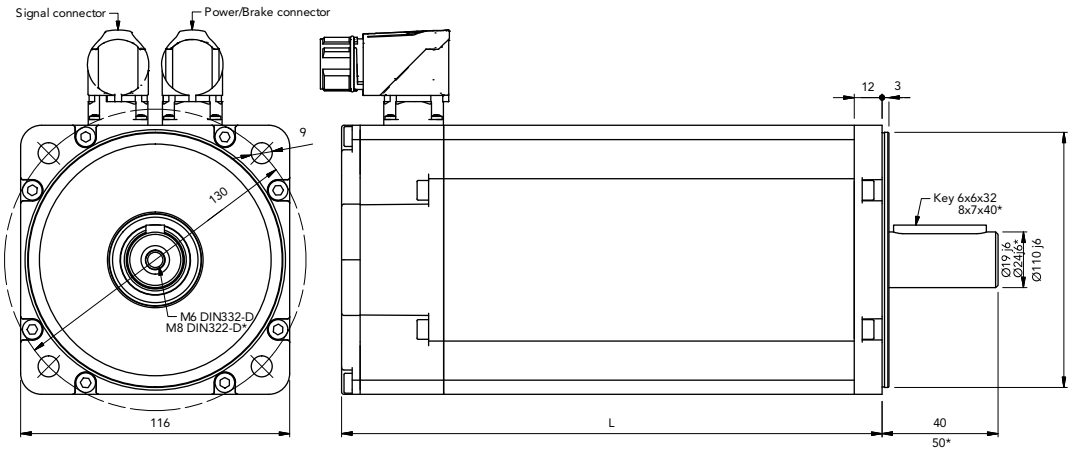

* Only for type B63.10Y, B63.12Y, B63.14Y

MECHANICAL DATA

Type	Torque Nm	Length with RESOLVER (L) Without brake	Length with RESOLVER (L) With brake	Maximum Length with ENCODER (L) Without brake	Maximum Length with ENCODER (L) With brake	Weight Kg Without brake	Weight Kg With brake
B63.06Y	6	168	204.5	168	204.5	7.1	8.6
B63.08Y	8	183	219.5	183	219.5	8.0	9.4
B63.10Y	10	198	234.5	198	234.5	8.9	10.3
B63.12Y	12	213	249.5	213	249.5	10.0	11.4
B63.14Y	14	233	269.5	233	269.5	11.3	12.7

BRAKE DATA

Brake data	Symbol	Data	Unit
Holding torque 100°C	Mbr	17	Nm
Voltage	Ubr	24	Vdc +/- 10%
Resistance	Rbr	30.8	Ohm
Electrical Power	Pbr	18.7	W
Current	Ibr	0.78	Adc
Additional* Rotor Inertia	Jbr	3.6	kgcm2
Opening (release) time	to max	75	ms
Closing (fall in) time	tc max	25	ms
Additional* Motor weight	mbr	1.5	kg

* Additional values are related to the motor data when the brake is mounted to the motor of the respective size, these values differ from the brake data in unmounted condition!

FOR MAINS VOLTAGE
400 V

Type	Stall torque (Δt=105°C) M_o Nm	Rated speed n 1/min	Rated power P_n kW	Rated torque (Δt=105°C) M_n Nm	Peak torque M_{pk} Nm	Maximum speed n_{max} rpm	Moment of inertia J 10^{-4} Kgm²	Peak torque acceleration a_{pk} rad/sec²	Thermal time constant T_{th} min	Thermal protection threshold ϑ_{max} ° C	Voltage constant k_e Vs	Torque constant k_t Nm/A	Resistance phase to phase (20° C) R_w Ω	Inductance phase to phase L_w mH	B.E.M.F. at rated speed E_n Vrms	Stall current I_o Arms	Rated current I_n Arms	Power Connector Size
3000 min^{-1} - Self Cooled																		
B63.06Y	6	3000	1.7	5.5	29	6600	7.76	37371	31	140	0.94	1.63	3.20	12.5	296	3.7	3.4	7/1
B63.08Y	8	3000	2.2	7.0	38	6600	10.4	36715	32	140	0.94	1.63	2.30	9.9	296	4.9	4.3	7/1
B63.10Y	10	3000	2.7	8.5	48	6600	12.4	38710	34	140	0.94	1.63	1.74	7.9	296	6.1	5.2	7/1
B63.12Y	12	3000	3.2	10.1	57	6600	14.9	38358	37	140	0.94	1.63	1.32	6.5	296	7.4	6.2	7/1
B63.14Y	14	3000	3.7	11.8	70	6600	18.2	38546	41	140	0.94	1.63	1.15	5.7	296	8.6	7.2	7/1
4500 min^{-1} - Self Cooled																		
B63.06Y	6	4500	2.2	4.7	29	6600	7.76	37371	31	140	0.63	1.09	1.44	5.6	296	5.5	4.3	7/1
B63.08Y	8	4500	2.8	6.0	38	6600	10.4	36715	32	140	0.63	1.09	1.04	4.5	296	7.3	5.5	7/1
B63.10Y	10	4500	3.3	7.1	48	6600	12.4	38710	34	140	0.63	1.09	0.78	3.6	296	9.2	6.5	7/1
B63.12Y	12	4500	3.9	8.3	57	6600	14.9	38358	37	140	0.63	1.09	0.59	2.9	296	11.0	7.6	7/1
B63.14Y	14	4500	4.6	9.7	70	6600	18.2	38546	41	140	0.63	1.09	0.52	2.6	296	12.8	8.9	7/1

FOR MAINS VOLTAGE
400 V

B63.06Y - SELF COOLED

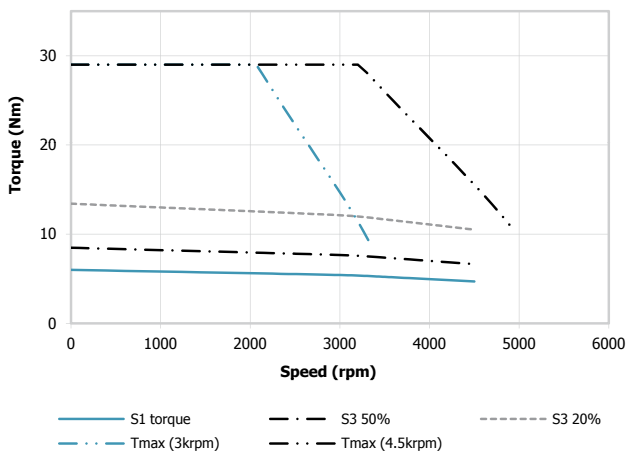

B63.08Y - SELF COOLED

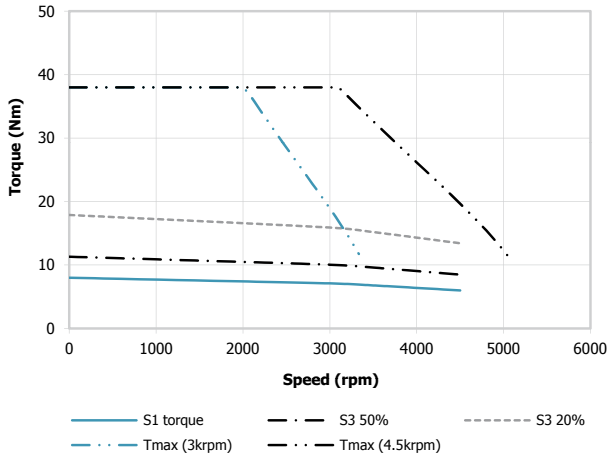

B63.10Y - SELF COOLED

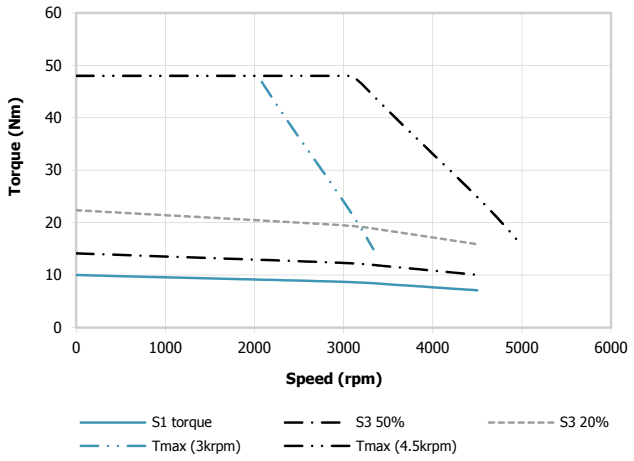

B63.12Y - SELF COOLED

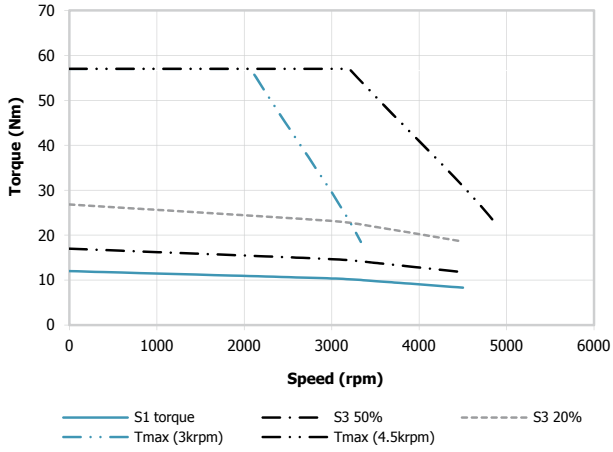

B63.14Y - SELF COOLED

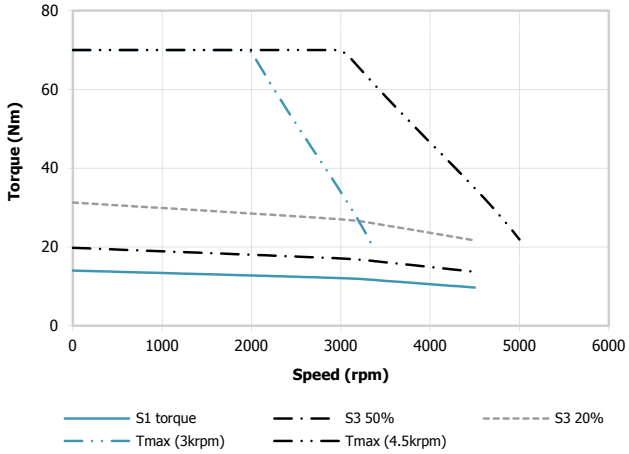

TYPE B71Q - 8 POLES - 4.5 TO 26 Nm

FOR TYPE B71Q - 8 POLES - 29 TO 38 Nm, PLEASE REFER TO PAGE 72

FOR MAINS VOLTAGE 400 V

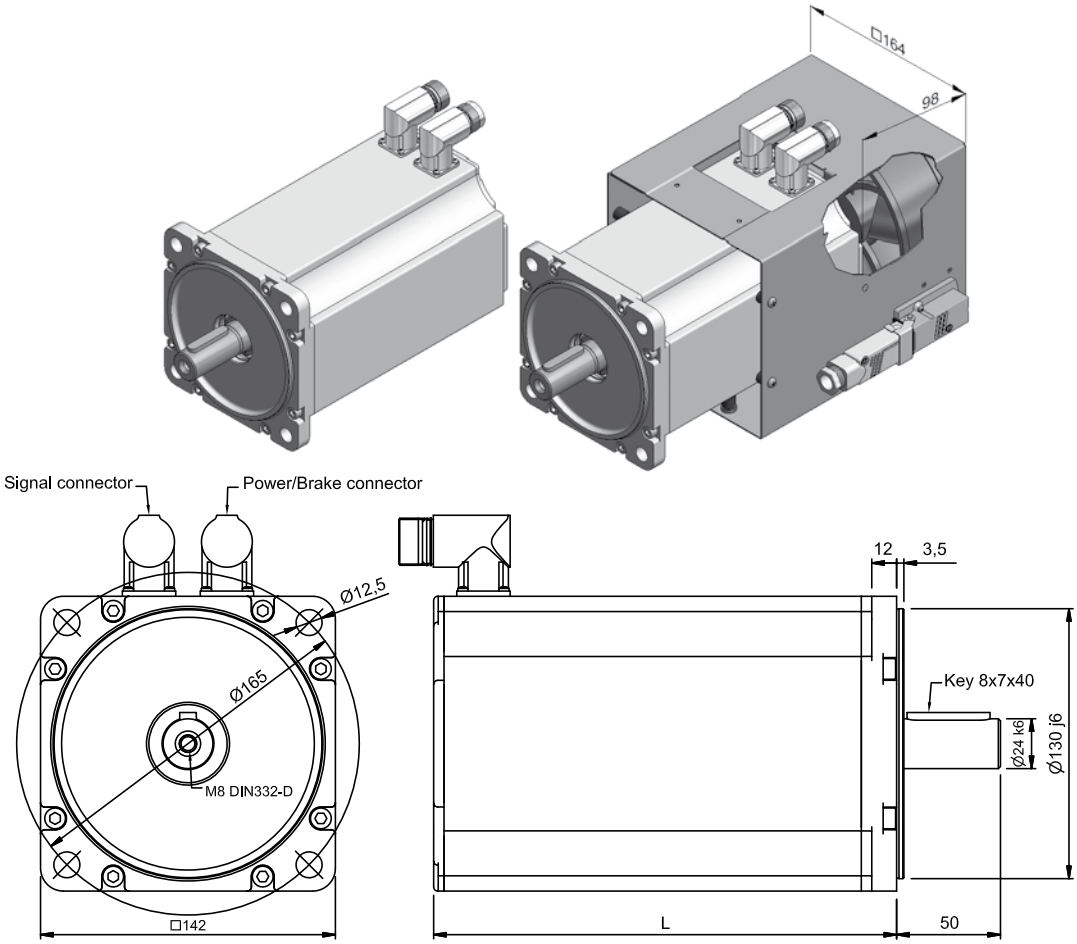

MECHANICAL DATA

Type	Torque Nm	Length with RESOLVER Without brake	Length with RESOLVER With brake	Maximum Length with ENCODER Without brake	Maximum Length with ENCODER With brake	Weight Kg Without brake	Weight Kg With brake
B71.04Q	4.5	148	183	159	194	7.5	9.5
B71.08Q	9	173	208	184	219	9.5	11.5
B71.12Q	12.5	198	228	209	239	11.5	13.5
B71.16Q	16	223	253	234	264	13.5	15.5
B71.20Q	20	248	273	259	284	15.5	17.5
B71.26Q	26	298	318	309	329	19.5	21.5

BRAKE DATA

Brake data	Symbol	Data	Unit
Holding torque 100°C	Mbr	15	Nm
Voltage	Ubr	24	Vdc+/- 10%
Resistance	Rbr	24	Ohm
Electrical Power	Pbr	24	W
Current	Ibr	1.0	Adc
Additional* Rotor Inertia	Jbr	1.66	kgcm²
Opening (release) time	to max	50	ms
Closing (fall in) time	tc max	30	ms
Additional* Motor weight	mbr	1.5	kg

* Additional values are related to the motor data when the brake is mounted to the motor of the respective size, these values differ from the brake data in unmounted condition!

TYPE B71Q - 8 POLES - 4.5 TO 26 Nm

FOR TYPE B71Q - 8 POLES - 29 TO 38 Nm, PLEASE REFER TO PAGE 72

FOR MAINS VOLTAGE
400 V

Type	Stall torque (Δt=105°C) M_o Nm	Rated speed n 1/min	Rated power P_n kW	Rated torque (Δt=105°C) M_n Nm	Peak torque M_{pk} Nm	Maximum speed n_{max} rpm	Moment of inertia J 10^{-4} Kgm²	Peak torque acceleration a_{pk} rad/sec²	Thermal time constant T_{th} min	Thermal protection threshold ϑ_{max} ° C	Voltage constant k_e Vs	Torque constant k_t Nm/A	Resistance phase to phase (20° C) R_W Ω	Inductance phase to phase L_W mH	B.E.M.F. at rated speed E_n Vrms	Stall current I_o Arms	Rated current I_n Arms	Power Connector Size
2000 min⁻¹ - Self Cooled																		
B71.04Q	4.5	2000	0.9	4.2	13.8	6600	3.6	38122	33	140	1.41	2.44	12.03	99.0	296	1.8	1.7	7/1
B71.08Q	9.0	2000	1.7	8.1	27.6	6600	6.0	45695	37	140	1.41	2.44	4.03	44.4	296	3.7	3.3	7/1
B71.12Q	12.5	2000	2.5	11.8	41.4	6600	8.2	50488	40	140	1.41	2.44	2.51	24.5	296	5.1	4.8	7/1
B71.16Q	16.0	2000	3.2	15.1	55.2	6600	10.7	51589	43	140	1.41	2.44	1.73	20.9	296	6.5	6.2	7/1
B71.20Q	20.0	2000	3.9	18.5	69.0	6600	13.1	52672	46	140	1.41	2.44	1.39	14.2	296	8.2	7.6	7/1
B71.26Q	26.0	2000	4.7	22.4	96.6	6600	18.4	52500	49	140	1.41	2.44	0.91	11.2	296	10.6	9.2	7/1
3000 min⁻¹ - Self Cooled																		
B71.04Q	4.5	3000	1.3	4.0	13.8	6600	3.6	38122	33	140	0.94	1.63	5.13	40.3	296	2.8	2.5	7/1
B71.08Q	9.0	3000	2.4	7.7	27.6	6600	6.0	45695	37	140	0.94	1.63	2.16	21.5	296	5.5	4.7	7/1
B71.12Q	12.5	3000	3.6	11.6	41.4	6600	8.2	50488	40	140	0.94	1.63	1.13	12.5	296	7.7	7.1	7/1
B71.16Q	16.0	3000	4.4	13.9	55.2	6600	10.7	51589	43	140	0.94	1.63	0.75	8.2	296	9.8	8.5	7/1
B71.20Q	20.0	3000	5.5	17.5	69.0	6600	13.1	52672	46	140	0.94	1.63	0.65	6.3	296	12.3	10.7	7/1
B71.26Q	26.0	3000	5.9	18.9	96.6	6600	18.4	52500	49	140	0.94	1.63	0.41	5.0	296	16.0	11.6	7/1
4500 min⁻¹ - Self Cooled																		
B71.04Q	4.5	4500	1.8	3.9	13.8	6600	3.6	38122	33	140	0.63	1.09	2.22	19.3	296	4.1	3.6	7/1
B71.08Q	9.0	4500	3.4	7.3	27.6	6600	6.0	45695	37	140	0.63	1.09	0.79	8.7	296	8.3	6.7	7/1
B71.12Q	12.5	4500	4.5	9.5	41.4	6600	8.2	50488	40	140	0.63	1.09	0.51	5.9	296	11.5	8.7	7/1
B71.16Q	16.0	4500	6.0	12.7	55.2	6600	10.7	51589	43	140	0.63	1.09	0.34	4.1	296	14.7	11.7	7/1
B71.20Q	20.0	4500	6.9	14.6	69.0	6600	13.1	52672	46	140	0.63	1.09	0.29	3.2	296	18.4	13.4	7/1
B71.26Q	26.0	4500	6.9	14.7	96.6	6600	18.4	52500	49	140	0.63	1.09	0.19	2.4	296	23.9	13.5	7/1

Type	Stall torque (Δt=105°C) M_o Nm	Rated speed n 1/min	Rated power P_n kW	Rated torque (Δt=105°C) M_n Nm	Peak torque M_{pk} Nm	Maximum speed n_{max} rpm	Moment of inertia J 10^{-4} Kgm²	Peak torque acceleration a_{pk} rad/sec²	Thermal time constant T_{th} min	Thermal protection threshold ϑ_{max} ° C	Voltage constant k_e Vs	Torque constant k_t Nm/A	Resistance phase to phase (20° C) R_W Ω	Inductance phase to phase L_W mH	B.E.M.F. at rated speed E_n Vrms	Stall current I_o Arms	Rated current I_n Arms	Power Connector Size
2000 min⁻¹ - Air Cooled																		
B71.04Q	6.0	2000	1.2	5.6	13.8	6600	3.6	38122	33	140	1.41	2.44	11.3	99.0	296	2.5	2.3	7/1
B71.08Q	12.0	2000	2.3	11.0	27.6	6600	6.0	45695	37	140	1.41	2.44	4.03	44.4	296	4.9	4.5	7/1
B71.12Q	17.0	2000	3.3	15.8	41.4	6600	8.2	50488	40	140	1.41	2.44	2.51	24.5	296	7.0	6.5	7/1
B71.16Q	22.0	2000	4.3	20.5	55.2	6600	10.7	51589	43	140	1.41	2.44	1.73	20.9	296	9.0	8.4	7/1
B71.20Q	27.5	2000	5.3	25.5	69.0	6600	13.1	52672	46	140	1.41	2.44	1.39	14.2	296	11.3	10.4	7/1
B71.26Q	35.5	2000	7.0	33.5	96.6	6600	18.4	52500	49	140	1.41	2.44	0.91	11.2	296	14.5	13.7	7/1
3000 min⁻¹ - Air Cooled																		
B71.04Q	6.0	3000	1.7	5.3	13.8	6600	3.6	38122	33	140	0.94	1.63	5.13	40.3	296	3.7	3.3	7/1
B71.08Q	12.0	3000	3.3	10.5	27.6	6600	6.0	45695	37	140	0.94	1.63	2.16	21.5	296	7.4	6.4	7/1
B71.12Q	17.0	3000	4.7	15.0	41.4	6600	8.2	50488	40	140	0.94	1.63	1.13	12.5	296	10.4	9.2	7/1
B71.16Q	22.0	3000	6.1	19.5	55.2	6600	10.7	51589	43	140	0.94	1.63	0.75	8.2	296	13.5	12.0	7/1
B71.20Q	27.5	3000	7.7	24.5	69.0	6600	13.1	52672	46	140	0.94	1.63	0.65	6.3	296	16.9	15.0	7/1
B71.26Q	35.5	3000	10.1	32.0	96.6	6600	18.4	52500	49	140	0.94	1.63	0.41	5.0	296	21.8	19.7	7/1
4500 min⁻¹ - Air Cooled																		
B71.04Q	6.0	4500	2.3	4.8	13.8	6600	3.6	38122	33	140	0.63	1.09	2.22	19.3	296	5.5	4.4	7/1
B71.08Q	12.0	4500	4.5	9.5	27.6	6600	6.0	45695	37	140	0.63	1.09	0.79	8.7	296	11.0	8.7	7/1
B71.12Q	17.0	4500	6.3	13.3	41.4	6600	8.2	50488	40	140	0.63	1.09	0.51	5.9	296	15.6	12.2	7/1
B71.16Q	22.0	4500	8.0	17.0	55.2	6600	10.7	51589	43	140	0.63	1.09	0.34	4.1	296	20.2	15.6	7/1
B71.20Q	27.5	4500	10.1	21.5	69.0	6600	13.1	52672	46	140	0.63	1.09	0.29	3.2	296	25.3	19.8	7/1
B71.26Q	32.7	4500	13.0	27.5	96.6	6600	18.4	52500	49	140	0.63	1.09	0.19	2.4	296	30.0	25.3	7/1.5

TYPE B71Q - 8 POLES - 4.5 TO 26 Nm

FOR TYPE B71Q - 8 POLES - 29 TO 38 Nm, PLEASE REFER TO PAGE 72

FOR MAINS VOLTAGE
400 V

B71.04Q - SELF COOLED

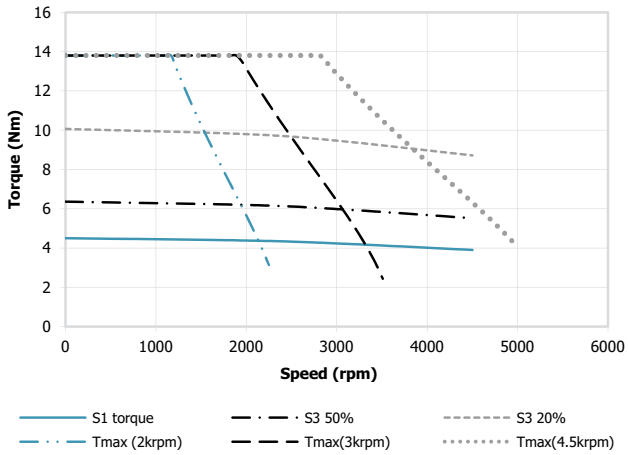

B71.08Q - SELF COOLED

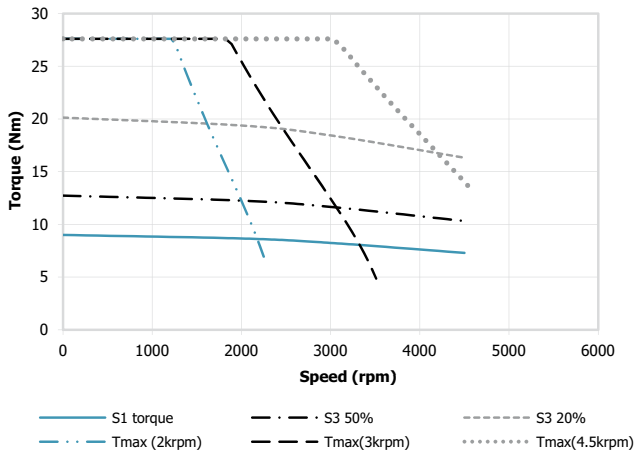

B71.12Q - SELF COOLED

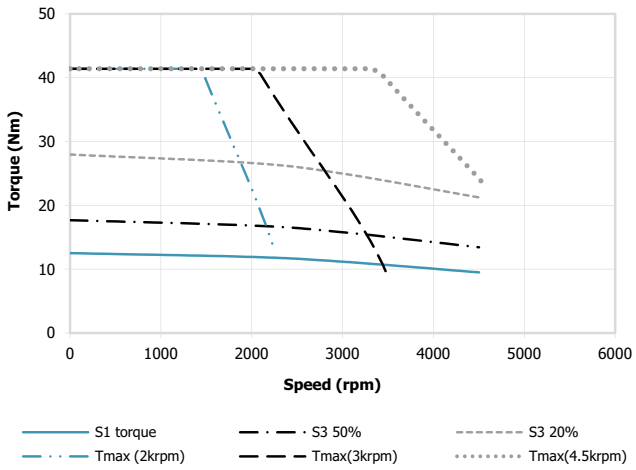

B71.16Q - SELF COOLED

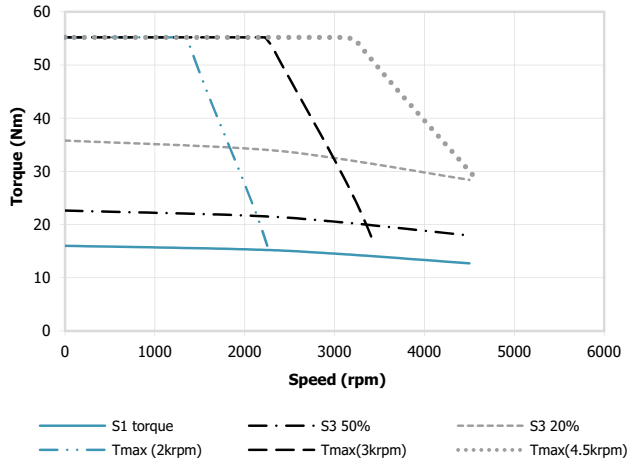

B71.20Q - SELF COOLED

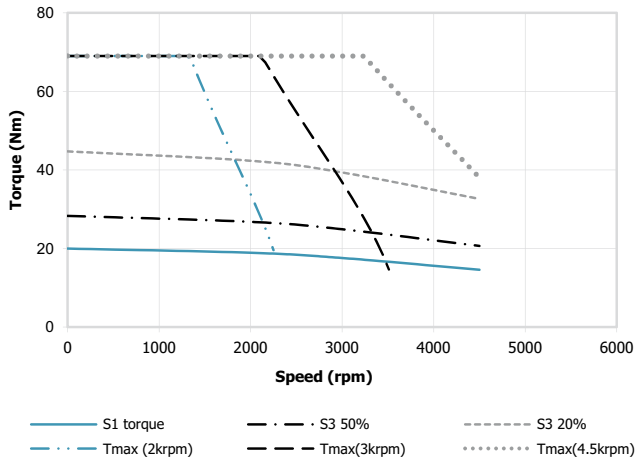

B71.26Q - SELF COOLED

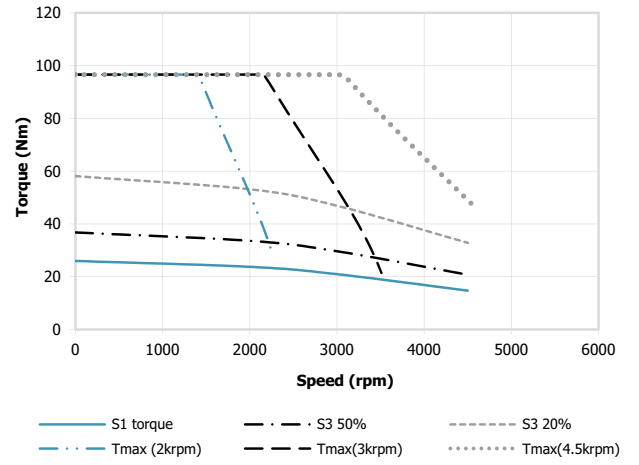

TYPE B71Q - 8 POLES - 4.5 TO 26 Nm

FOR TYPE B71Q - 8 POLES - 29 TO 38 Nm, PLEASE REFER TO PAGE 72

FOR MAINS VOLTAGE
400 V

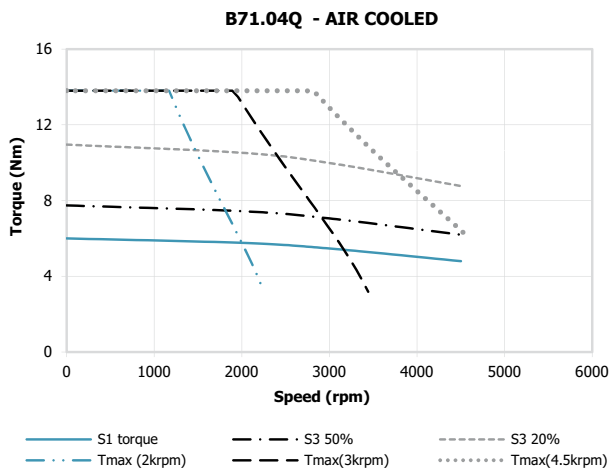

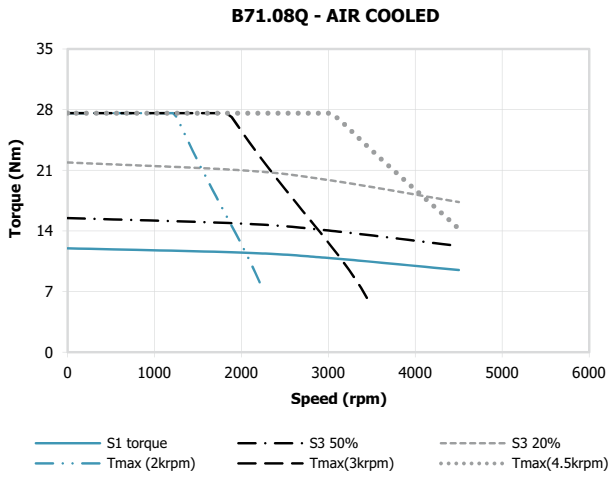

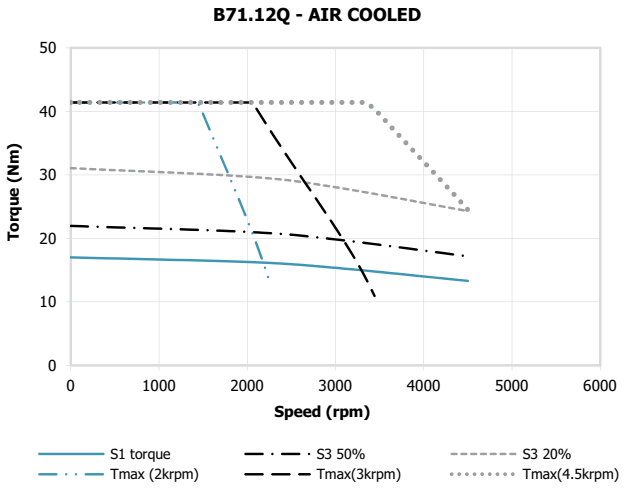

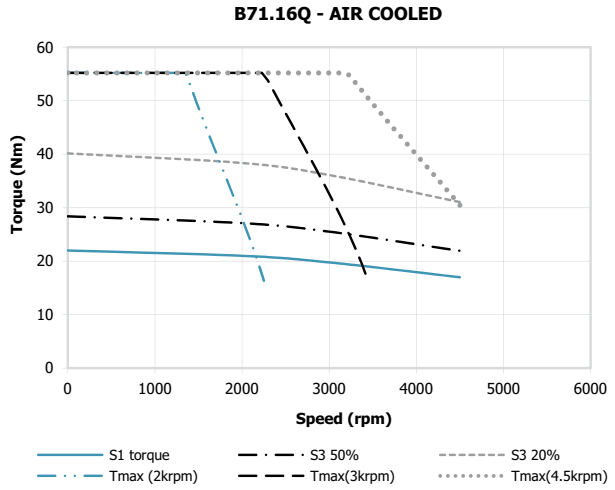

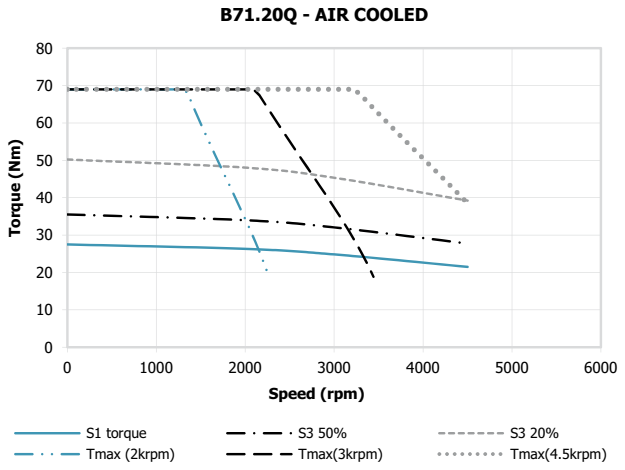

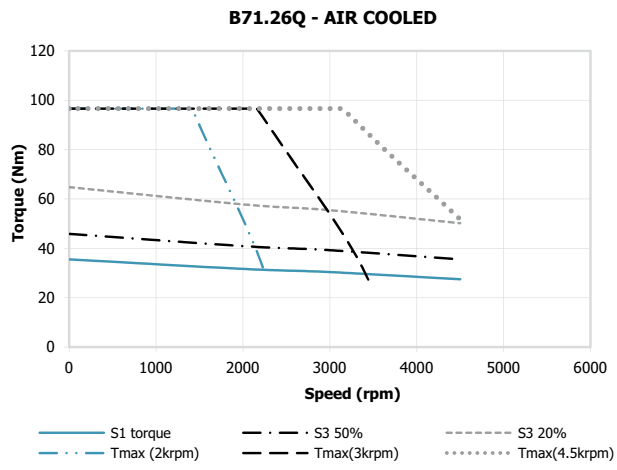

TYPE B71Q - 8 POLES - 29 TO 38 Nm

FOR TYPE B71Q - 8 POLES - 4.5 TO 26 Nm, PLEASE REFER TO PAGE 68

FOR MAINS VOLTAGE
400 V

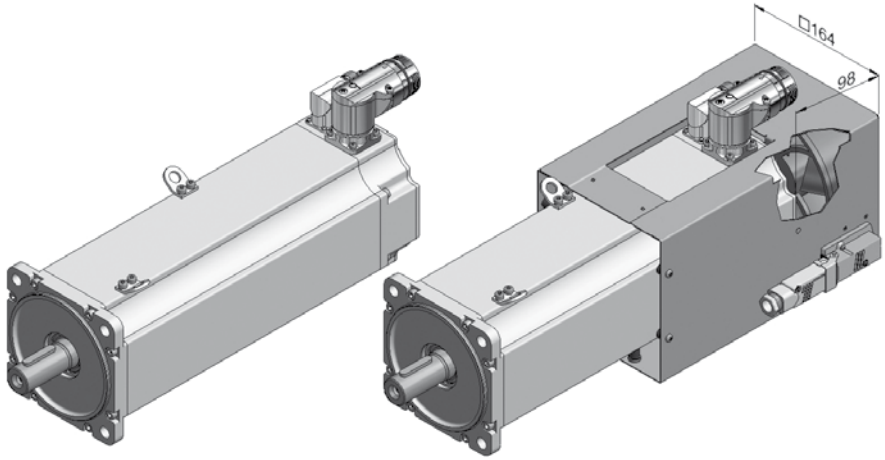

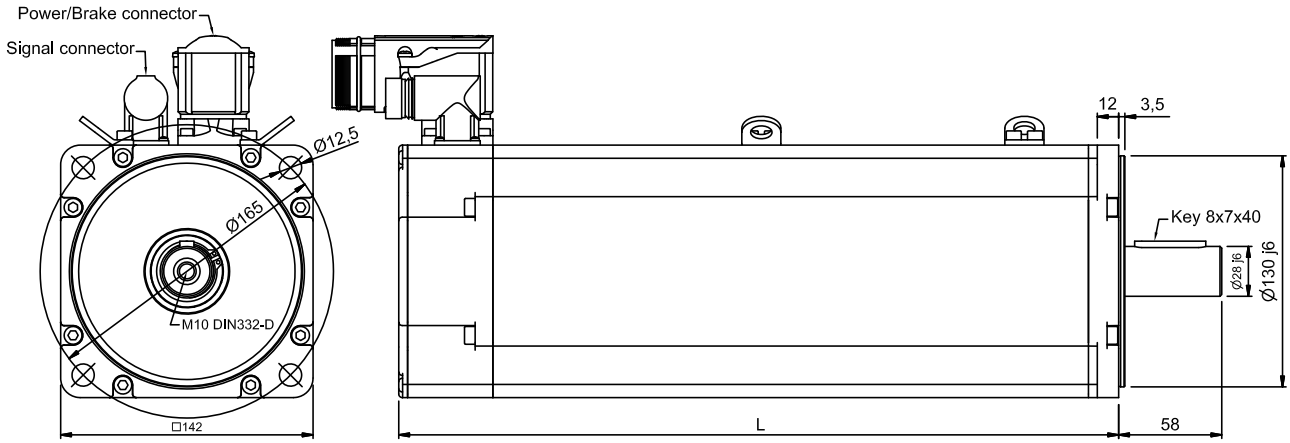

MECHANICAL DATA

Type	Torque Nm	Length with RESOLVER (**) Without brake	Length with RESOLVER (**) With brake	Maximum Length with ENCODER Without brake	Maximum Length with ENCODER With brake	Weight Kg Without brake	Weight Kg With brake
B71.29Q	29	338	380	349	391	22.5	25.5
B71.32Q	32	360	402	371	413	24.8	27.3
B71.35Q	35	383	425	394	436	27.1	29.6
B71.38Q	38	405	447	416	458	29.4	31.9

** Motor with resolver which needs size 1,5 power connector, have the same length of the motor with encoder

BRAKE DATA

Brake data	Symbol	Data	Unit
Holding torque 100°C	Mbr	33	Nm
Voltage	Ubr	24	Vdc+/- 10%
Resistance	Rbr	24	Ohm
Electrical Power	Pbr	24	W
Current	Ibr	1.0	Adc
Additional* Rotor Inertia	Jbr	9.5	kgcm²
Opening (release) time	to max	110	ms
Closing (fall in) time	tc max	70	ms
Additional* Motor weight	mbr	2.5	kg

* Additional values are related to the motor data when the brake is mounted to the motor of the respective size, these values differ from the brake data in unmounted condition!

TYPE B71Q - 8 POLES - 29 TO 38 Nm

FOR TYPE B71Q - 8 POLES - 4.5 TO 26 Nm, PLEASE REFER TO PAGE 68

FOR MAINS VOLTAGE
400 V

Type	Stall torque (Δt=105°C) M_o Nm	Rated speed n 1/min	Rated power P_n kW	Rated torque (Δt=105°C) M_n Nm	Peak torque M_{pk} Nm	Maximum speed n_{max} rpm	Moment of inertia J 10^{-4} Kgm²	Peak torque acceleration a_{pk} rad/sec²	Thermal time constant T_{th} min	Thermal protection threshold ϑ_{max} ° C	Voltage constant k_e Vs	Torque constant k_t Nm/A	Resistance phase to phase (20° C) R_w Ω	Inductance phase to phase L_w mH	B.E.M.F. at rated speed E_n Vrms	Stall current I_o Arms	Rated current I_n Arms	Power Connector Size
2000 min⁻¹ - Self Cooled																		
B71.29Q	29	2000	5.0	23.9	110.4	6600	20.6	53592	51	140	1.41	2.44	0.78	9.7	296	11.9	9.8	7/1
B71.32Q	32	2000	5.3	25.5	124.2	6600	23.0	54000	52	140	1.41	2.44	0.70	8.7	296	13.1	10.4	7/1
B71.35Q	35	2000	5.6	26.7	138.0	6600	25.5	54118	53	140	1.41	2.44	0.62	7.8	296	14.3	10.9	7/1
B71.38Q	38	2000	5.9	28.0	151.0	6600	28.0	53929	55	140	1.41	2.44	0.54	6.8	296	15.6	11.5	7/1
3000 min⁻¹ - Self Cooled																		
B71.29Q	29	3000	6.4	20.3	110.4	6600	20.6	53592	51	140	0.94	1.63	0.34	4.3	296	17.8	12.5	7/1
B71.32Q	32	3000	6.8	21.8	124.2	6600	23.0	54000	52	140	0.94	1.63	0.31	3.9	296	19.6	13.4	7/1
B71.35Q	35	3000	7.2	23.0	138.0	6600	25.5	54118	53	140	0.94	1.63	0.28	3.6	296	21.5	14.1	7/1
B71.38Q	38	3000	7.6	24.1	151.0	6600	28.0	53929	55	140	0.94	1.63	0.26	3.2	296	23.3	14.8	7/1
4500 min⁻¹- Self Cooled																		
B71.29Q	29	4500	7.2	15.3	110.4	6600	20.6	53592	51	140	0.63	1.09	0.16	2.0	296	26.7	14.1	7/1
B71.32Q	32	4500	7.5	16.0	124.2	6600	23.0	54000	52	140	0.63	1.09	0.14	1.8	296	29.5	14.7	7/1.5
B71.35Q	35	4500	7.7	16.4	138.0	6600	25.5	54118	53	140	0.63	1.09	0.13	1.6	296	32.2	15.1	7/1.5
B71.38Q	38	4500	7.9	16.8	151.0	6600	28.0	53929	55	140	0.63	1.09	0.11	1.4	296	35.0	15.5	7/1.5

Type	Stall torque (Δt=105°C) M_o Nm	Rated speed n 1/min	Rated power P_n kW	Rated torque (Δt=105°C) M_n Nm	Peak torque M_{pk} Nm	Maximum speed n_{max} rpm	Moment of inertia J 10^{-4} Kgm²	Peak torque acceleration a_{pk} rad/sec²	Thermal time constant T_{th} min	Thermal protection threshold ϑ_{max} ° C	Voltage constant k_e Vs	Torque constant k_t Nm/A	Resistance phase to phase (20° C) R_w Ω	Inductance phase to phase L_w mH	B.E.M.F. at rated speed E_n Vrms	Stall current I_o Arms	Rated current I_n Arms	Power Connector Size
2000 min⁻¹ - Air Cooled																		
B71.29Q	40	2000	8.2	39.2	110.4	6600	20.6	53592	51	140	1.41	2.44	0.78	9.7	296	16.4	16.1	7/1
B71.32Q	44	2000	8.9	42.6	124.2	6600	23.0	54000	52	140	1.41	2.44	0.70	8.7	296	18.0	17.4	7/1
B71.35Q	48	2000	9.7	46.1	138.0	6600	25.5	54118	53	140	1.41	2.44	0.62	7.8	296	19.7	18.9	7/1
B71.38Q	52	2000	10.4	49.7	151.0	6600	28.0	53929	55	140	1.41	2.44	0.54	6.8	296	21.3	20.4	7/1
3000 min⁻¹ - Air Cooled																		
B71.29Q	40	3000	11.4	36.3	110.4	6600	20.6	53592	51	140	0.94	1.63	0.34	4.3	296	24.6	22.3	7/1
B71.32Q	44	3000	12.6	40.0	124.2	6600	23.0	54000	52	140	0.94	1.63	0.31	3.9	296	27.0	24.6	7/1
B71.35Q	48	3000	13.8	43.9	138.0	6600	25.5	54118	53	140	0.94	1.63	0.28	3.6	296	29.5	27.0	7/1.5
B71.38Q	52	3000	15.0	47.9	151.0	6600	28.0	53929	55	140	0.94	1.63	0.26	3.2	296	31.9	29.4	7/1.5
4500 min⁻¹- Air Cooled																		
B71.29Q	40	4500	14.5	30.7	110.4	6600	20.6	53592	51	140	0.63	1.09	0.16	2.0	296	36.8	28.3	7/1.5
B71.32Q	44	4500	15.6	33.2	124.2	6600	23.0	54000	52	140	0.63	1.09	0.14	1.8	296	40.5	30.6	7/1.5
B71.35Q	48	4500	16.9	35.8	138.0	6600	25.5	54118	53	140	0.63	1.09	0.13	1.6	296	44.2	32.9	7/1.5
B71.38Q	52	4500	18.1	38.4	151.0	6600	28.0	53929	55	140	0.63	1.09	0.11	1.4	296	47.9	35.3	7/1.5

TYPE B71Q - 8 POLES - 29 TO 38 Nm

FOR TYPE B71Q - 8 POLES - 4.5 TO 26 Nm, PLEASE REFER TO PAGE 68

FOR MAINS VOLTAGE
400 V

B71.29Q - SELF COOLED

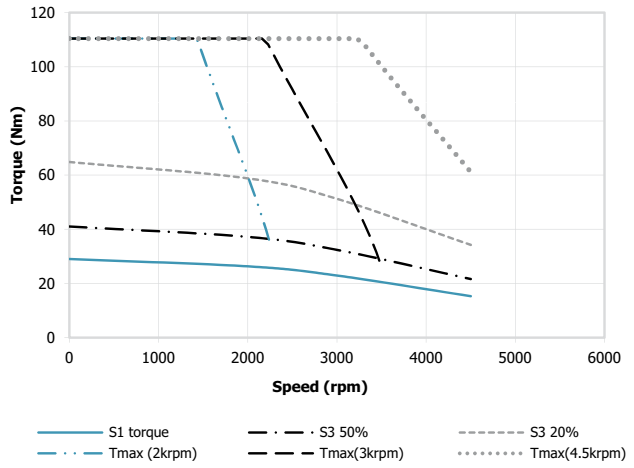

B71.32Q - SELF COOLED

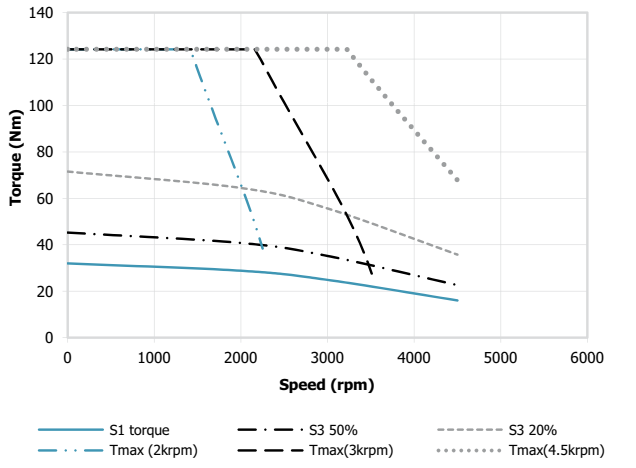

B71.35Q - SELF COOLED

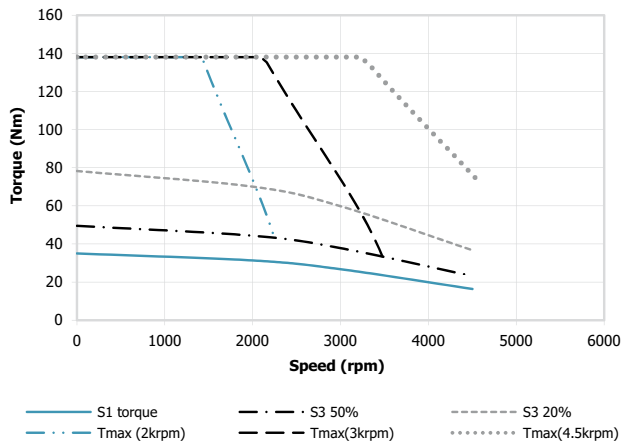

B71.38Q - SELF COOLED

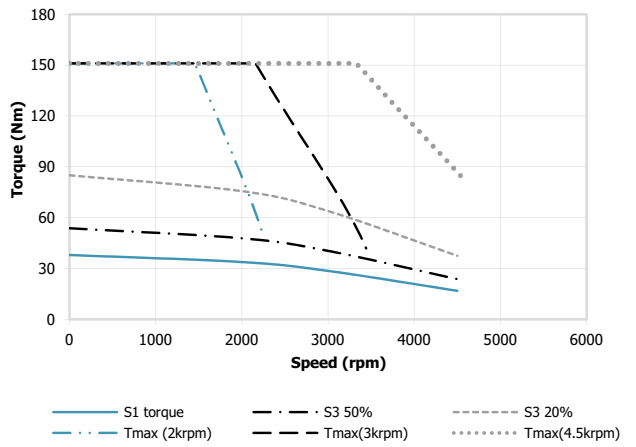

TYPE B71Q - 8 POLES - 29 TO 38 Nm

FOR TYPE B71Q - 8 POLES - 4.5 TO 26 Nm, PLEASE REFER TO PAGE 68

FOR MAINS VOLTAGE
400 V

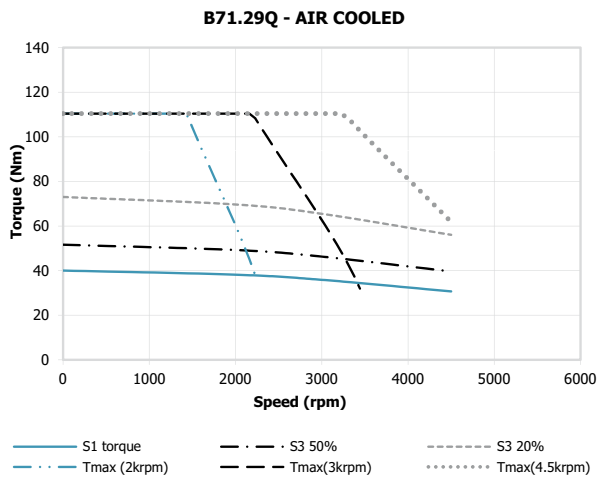

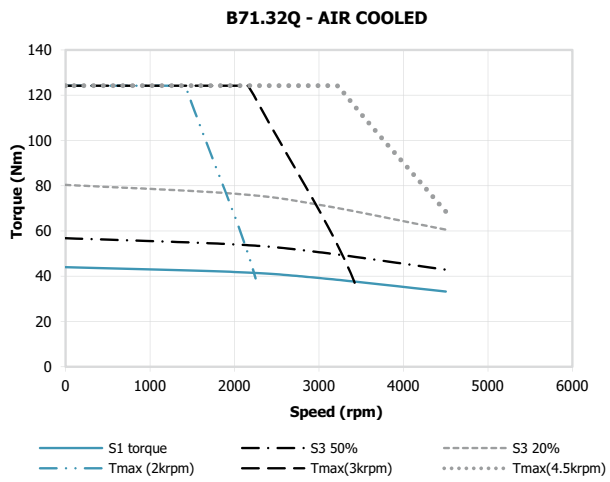

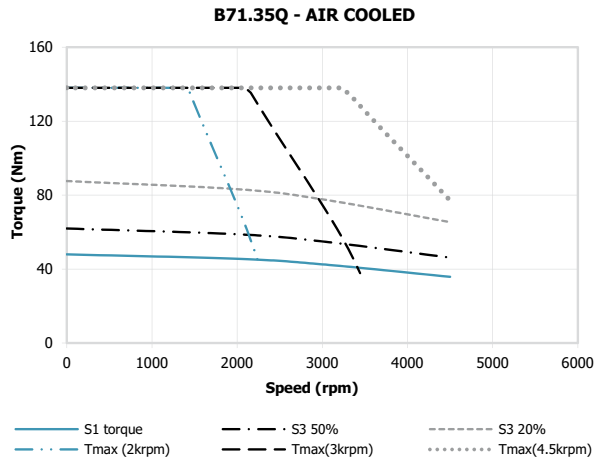

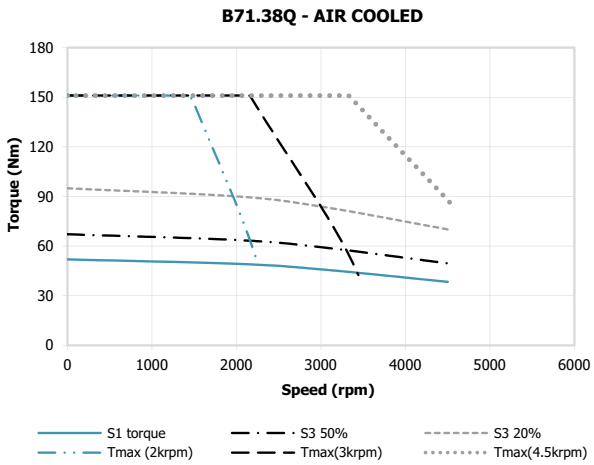

TYPE B100J - 10 POLES - 20 TO 42 Nm

FOR TYPE B100J - 10 POLES - 56 TO 80 Nm, PLEASE REFER TO PAGE 80

FOR MAINS VOLTAGE
400 V

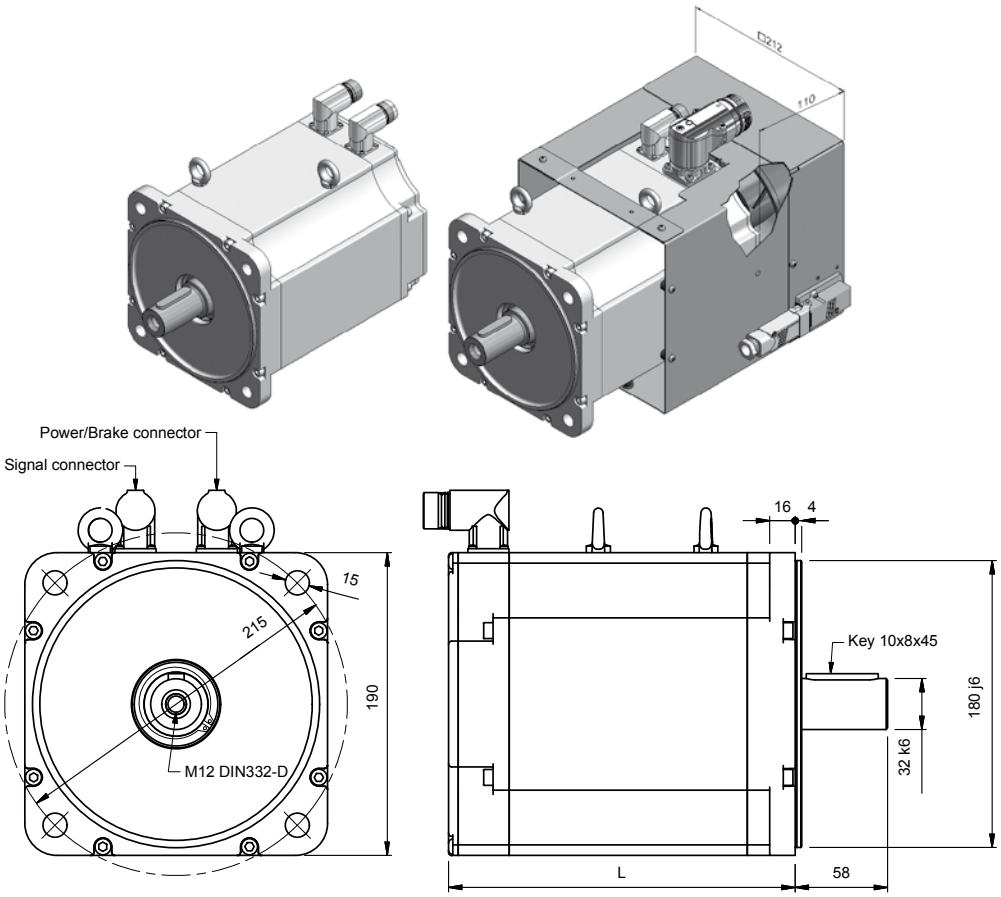

MECHANICAL DATA

Type	Torque Nm	Length with RESOLVER (L) Without brake	Length with RESOLVER (L) With brake	Maximum Length with ENCODER (L) Without brake	Maximum Length with ENCODER (L) With brake	Weight Kg Without brake	Weight Kg With brake
B10.20J	20	195	225	223	253	17	22
B10.28J	28	218	248	246	276	21	26
B10.36J	36	240*	270*	268*	298*	25	30
B10.42J	42	263*	293*	291*	321*	30	35

* Motors with size 1.5 connectors have an addictional lenght of 16 mm

BRAKE DATA

Brake data	Symbol	Data	Unit
Holding torque 100°C	Mbr	60	Nm
Voltage	Ubr	24	Vdc+/- 10%
Resistance	Rbr	28.3	Ohm
Electrical Power	Pbr	20.4	W
Current	Ibr	0.85	Adc
Additional* Rotor Inertia	Jbr	32	kgcm²
Opening (release) time	to max	155	ms
Closing (fall in) time	tc max	65	ms
Additional* Motor weight	mbr	3.8	kg

* Additional values are related to the motor data when the brake is mounted to the motor of the respective size, these values differ from the brake data in unmounted condition!

TYPE B100J - 10 POLES - 20 TO 42 Nm

FOR TYPE B100J - 10 POLES - 56 TO 80 Nm, PLEASE REFER TO PAGE 80

FOR MAINS VOLTAGE
400 V

Type	Stall torque (Δt=105°C) M_o Nm	Rated speed n 1/min	Rated power P_n kW	Rated torque (Δt=105°C) M_n Nm	Peak torque M_{pk} Nm	Maximum speed n_{max} rpm	Moment of inertia J 10^{-4} Kgm²	Peak torque acceleration a_{pk} rad/sec²	Thermal time constant T_{th} min	Thermal protection threshold ϑ_{max} ° C	Voltage constant k_e Vs	Torque constant k_t Nm/A	Resistance phase to phase (20° C) R_w Ω	Inductance phase to phase L_w mH	B.E.M.F. at rated speed E_n Vrms	Stall current I_o Arms	Rated current I_n Arms	Power Connector Size
2000 min^{-1} - Self Cooled																		
B10.20J	20	2000	3.8	18.3	75	4000	33	22727	32	140	1.41	2.45	1.78	18.7	296	8.2	7.5	7/1
B10.28J	28	2000	5.2	24.7	108	4000	46	23478	37	140	1.41	2.45	0.90	14.2	296	11.4	10.1	7/1
B10.36J	36	2000	6.3	30.1	144	4000	60	24000	41	140	1.41	2.45	0.63	11.0	296	14.7	12.3	7/1
B10.42J	42	2000	7.6	36.1	180	4000	74	24324	46	140	1.41	2.45	0.45	8.8	296	17.2	14.8	7/1
3000 min^{-1} - Self Cooled																		
B10.20J	20	3000	5.1	16.1	75	4000	33	22727	32	140	0.94	1.63	0.79	8.3	296	12.3	9.9	7/1
B10.28J	28	3000	6.9	22.0	108	4000	46	23478	37	140	0.94	1.63	0.40	6.3	296	17.2	13.5	7/1
B10.36J	36	3000	8.8	28.0	144	4000	60	24000	41	140	0.94	1.63	0.28	4.9	296	22.1	17.2	7/1
B10.42J	42	3000	10.2	32.5	180	4000	74	24324	46	140	0.94	1.63	0.22	3.9	296	25.8	19.9	7/1

Type	Stall torque (Δt=105°C) M_o Nm	Rated speed n 1/min	Rated power P_n kW	Rated torque (Δt=105°C) M_n Nm	Peak torque M_{pk} Nm	Maximum speed n_{max} rpm	Moment of inertia J 10^{-4} Kgm²	Peak torque acceleration a_{pk} rad/sec²	Thermal time constant T_{th} min	Thermal protection threshold ϑ_{max} ° C	Voltage constant k_e Vs	Torque constant k_t Nm/A	Resistance phase to phase (20° C) R_w Ω	Inductance phase to phase L_w mH	B.E.M.F. at rated speed E_n Vrms	Stall current I_o Arms	Rated current I_n Arms	Power Connector Size
2000 min^{-1} - Air Cooled																		
B10.20J	26	2000	5.1	24.2	75	4000	33	22727	32	140	0.94	1.63	1.78	18.7	296	10.6	9.9	7/1
B10.28J	36.4	2000	6.9	33.1	108	4000	46	23478	37	140	0.94	1.63	0.90	14.2	296	14.9	13.5	7/1
B10.36J	47.2	2000	8.8	42.1	144	4000	60	24000	41	140	0.94	1.63	0.63	11.0	296	19.3	17.2	7/1
B10.42J	55.4	2000	10.2	50.0	180	4000	74	24324	46	140	0.94	1.63	0.45	8.8	296	22.7	19.9	7/1
3000 min^{-1} - Air Cooled																		
B10.20J	26	3000	7.1	22.5	75	4000	33	22727	32	140	0.94	1.63	0.67	8.3	296	16.0	13.8	7/1
B10.28J	36.4	3000	9.7	30.8	108	4000	46	23478	37	140	0.94	1.63	0.40	6.3	296	22.3	18.9	7/1
B10.36J	47.2	3000	12.3	39.2	144	4000	60	24000	41	140	0.94	1.63	0.28	4.9	296	28.9	24.1	7/1.5
B10.42J	55.4	3000	14.3	45.5	180	4000	74	24324	46	140	0.94	1.63	0.22	3.9	296	34.0	27.9	7/1.5

FOR TYPE B100J - 10 POLES - 56 TO 80 Nm, PLEASE REFER TO PAGE 80

FOR MAINS VOLTAGE
400 V

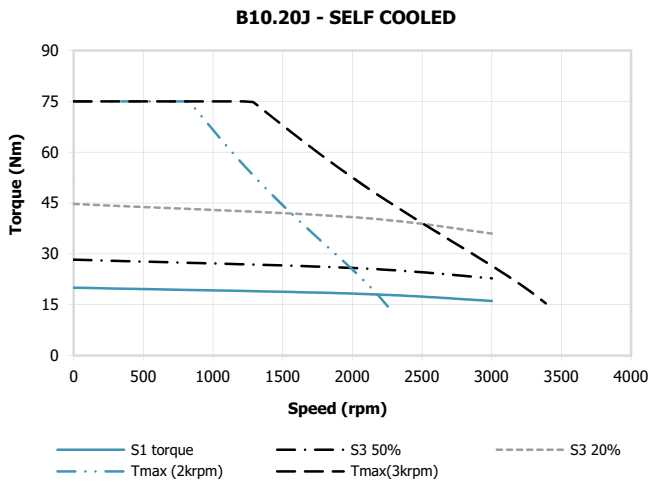

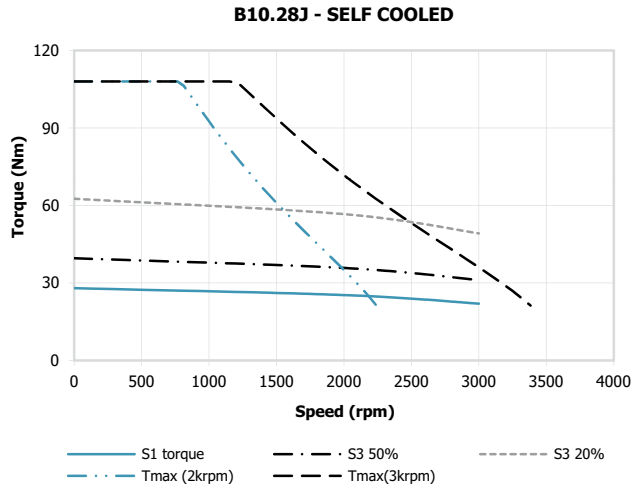

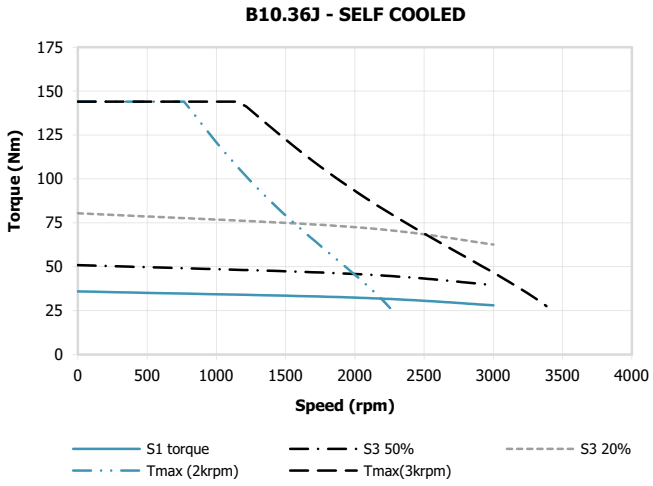

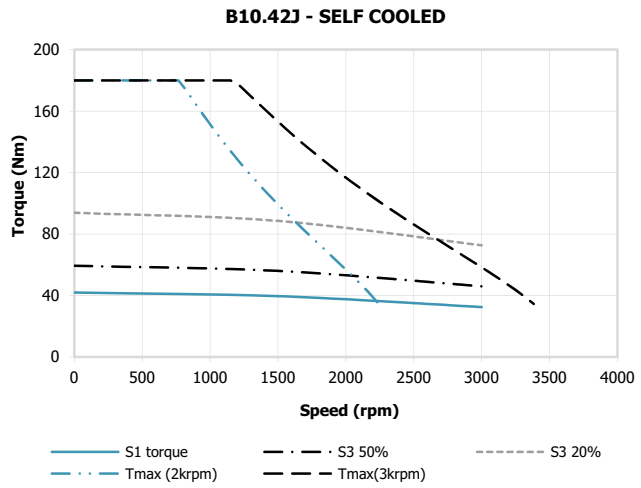

TYPE B100J - 10 POLES - 20 TO 42 Nm

FOR TYPE B100J - 10 POLES - 56 TO 80 Nm, PLEASE REFER TO PAGE 80

FOR MAINS VOLTAGE
400 V

B10.20J - AIR COOLED

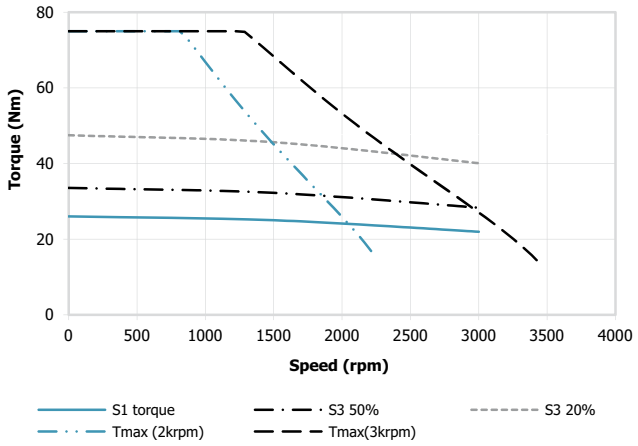

B10.28J - AIR COOLED

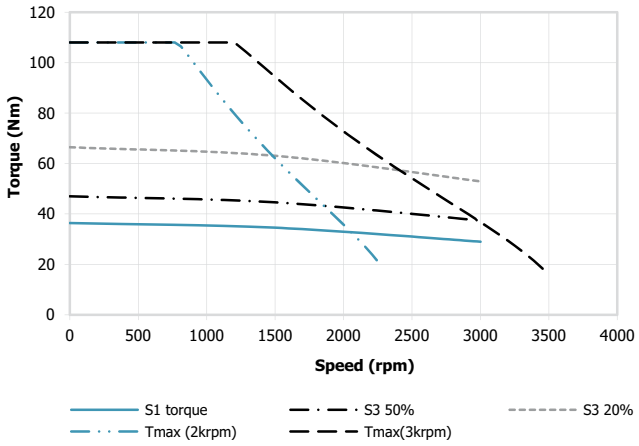

B10.36J - AIR COOLED

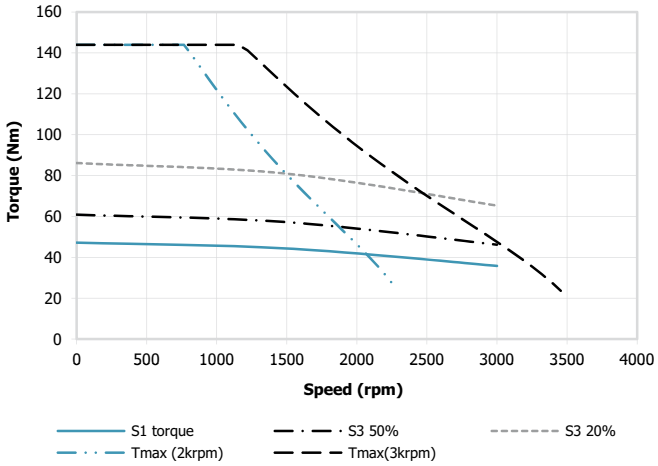

B10.42J -AIR COOLED

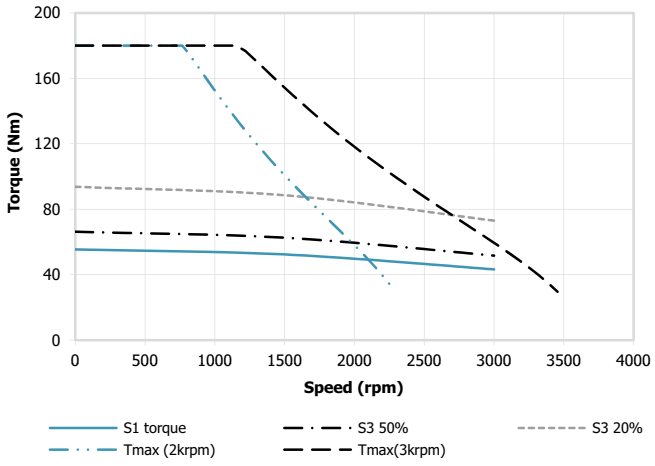

TYPE B100J - 10 POLES - 56 TO 80 Nm

FOR TYPE B100J - 10 POLES - 20 TO 42 Nm, PLEASE REFER TO PAGE 76

FOR MAINS VOLTAGE
400 V

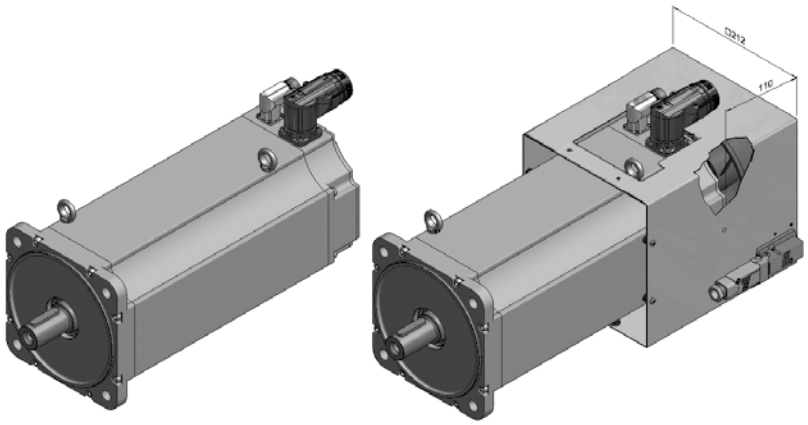

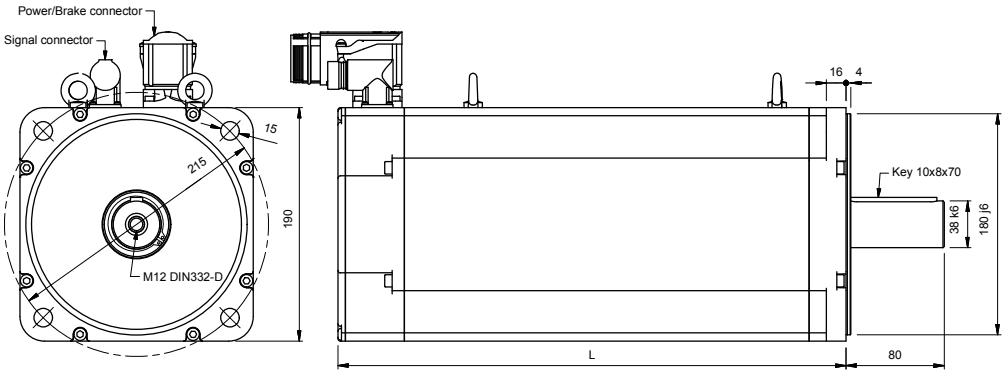

MECHANICAL DATA

Type	Torque Nm	Length with RESOLVER (L) Without brake	Length with RESOLVER (L) With brake	Maximum Length with ENCODER (L) Without brake	Maximum Length with ENCODER (L) With brake	Weight Kg Without brake	Weight Kg With brake
B10.56J	56	308*	338*	336*	366*	38	43
B10.68J	68	369	399	369	399	47	52
B10.80J	80	414	444	414	444	55	60

*Motors with size 1.5 connectors have an additional length of 16mm

BRAKE DATA

Brake data	Symbol	Data	Unit
Holding torque 100°C	Mbr	60	Nm
Voltage	Ubr	24	Vdc+/- 10%
Resistance	Rbr	28.3	Ohm
Electrical Power	Pbr	20.4	W
Current	Ibr	0.85	Adc
Additional* Rotor Inertia	Jbr	32	kgcm²
Opening (release) time	to max	155	ms
Closing (fall in) time	tc max	65	ms
Additional* Motor weight	mbr	3.8	kg

* Additional values are related to the motor data when the brake is mounted to the motor of the respective size, these values differ from the brake data in unmounted condition!

TYPE B100J - 10 POLES - 56 TO 80 Nm

FOR TYPE B100J - 10 POLES - 20 TO 42 Nm, PLEASE REFER TO PAGE 76

FOR MAINS VOLTAGE
400 V

Type	Stall torque (Δt=105°C) M_o Nm	Rated speed n 1/min	Rated power P_n kW	Rated torque (Δt=105°C) M_n Nm	Peak torque M_{pk} Nm	Maximum speed n_{max} rpm	Moment of inertia J 10^{-4} Kgm²	Peak torque acceleration a_{pk} rad/sec²	Thermal time constant T_{th} min	Thermal protection threshold ϑ_{max} ° C	Voltage constant k_e Vs	Torque constant k_t Nm/A	Resistance phase to phase (20° C) R_W Ω	Inductance phase to phase L_W mH	B.E.M.F. at rated speed E_n Vrms	Stall current I_o Arms	Rated current I_n Arms	Power Connector Size
2000 min^{-1} - Self Cooled																		
B10.56J	56	2000	9.3	44.5	230	4000	102	22549	56	140	1.41	2.45	0.31	5.6	296	22.9	18.2	7/1
B10.68J	68	2000	10.7	50.9	322	4000	130	24769	65	140	1.41	2.45	0.23	4.7	296	27.8	20.8	7/1.5
B10.80J	80	2000	12.1	57.8	396	4000	158	25068	74	140	1.41	2.45	0.18	4.1	296	32.7	23.6	7/1.5
3000 min^{-1} - Self Cooled																		
B10.56J	56	3000	11.6	37.0	230	4000	102	22549	56	140	0.94	1.63	0.15	2.7	296	34.4	22.7	7/1.5
B10.68J	68	3000	12.8	40.9	322	4000	130	24769	65	140	0.94	1.63	0.10	2.1	296	41.7	25.1	7/1.5
B10.80J	80	3000	13.8	44.0	396	4000	158	25068	74	140	0.94	1.63	0.08	1.8	296	49.1	27.0	7/1.5

Type	Stall torque (Δt=105°C) M_o Nm	Rated speed n 1/min	Rated power P_n kW	Rated torque (Δt=105°C) M_n Nm	Peak torque M_{pk} Nm	Maximum speed n_{max} rpm	Moment of inertia J 10^{-4} Kgm²	Peak torque acceleration a_{pk} rad/sec²	Thermal time constant T_{th} min	Thermal protection threshold ϑ_{max} ° C	Voltage constant k_e Vs	Torque constant k_t Nm/A	Resistance phase to phase (20° C) R_W Ω	Inductance phase to phase L_W mH	B.E.M.F. at rated speed E_n Vrms	Stall current I_o Arms	Rated current I_n Arms	Power Connector Size
2000 min^{-1} - Air Cooled																		
B10.56J	74.5	2000	12.9	61.7	230	4000	102	22549	56	140	1.41	2.45	0.31	5.6	296	30.4	25.2	7/1.5
B10.68J	91.1	2000	14.8	70.8	322	4000	130	24769	65	140	1.41	2.45	0.23	4.7	296	37.2	28.9	7/1.5
B10.80J	108	2000	16.8	80.3	396	4000	158	25068	74	140	1.41	2.45	0.18	4.1	296	41.1	32.5	7/1.5
3000 min^{-1} - Air Cooled																		
B10.56J	74.5	3000	16.3	51.8	230	4000	102	22549	56	140	0.94	1.63	0.15	2.7	296	45.7	31.8	7/1.5
B10.68J	91.1	3000	18.0	57.3	322	4000	130	24769	65	140	0.94	1.63	0.10	2.1	296	55.9	35.1	7/1.5
B10.80J	108	3000	19.4	61.6	396	4000	158	25068	74	140	0.94	1.63	0.08	1.8	296	66.3	37.8	7/1.5

TYPE B100J - 10 POLES - 56 TO 80 Nm

FOR TYPE B100J - 10 POLES - 20 TO 42 Nm, PLEASE REFER TO PAGE 76

FOR MAINS VOLTAGE
400 V

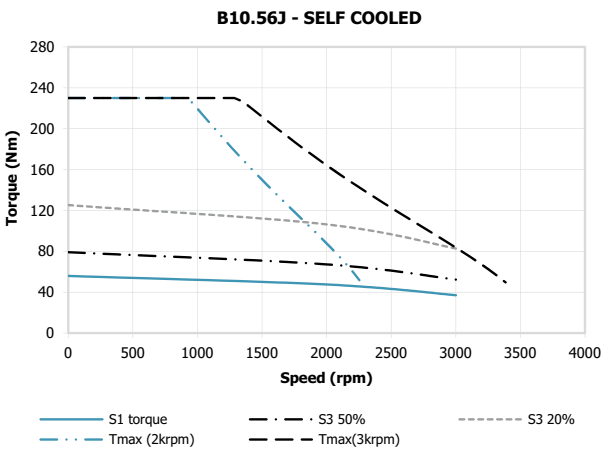

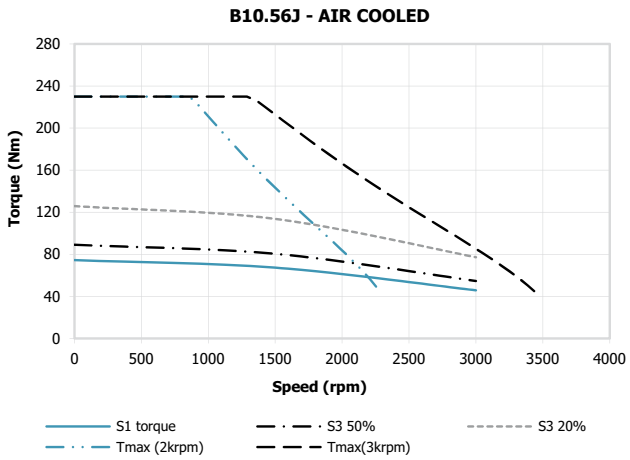

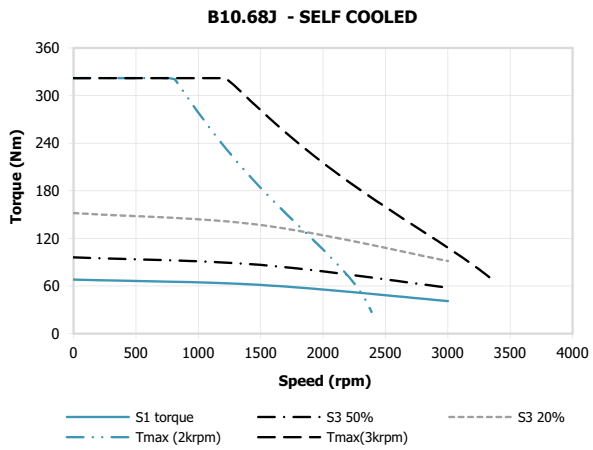

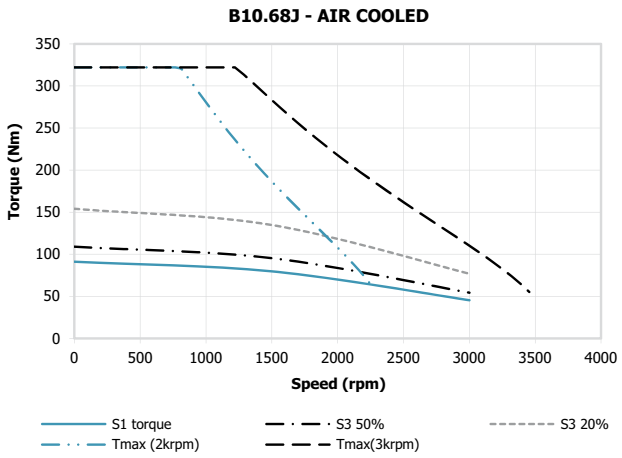

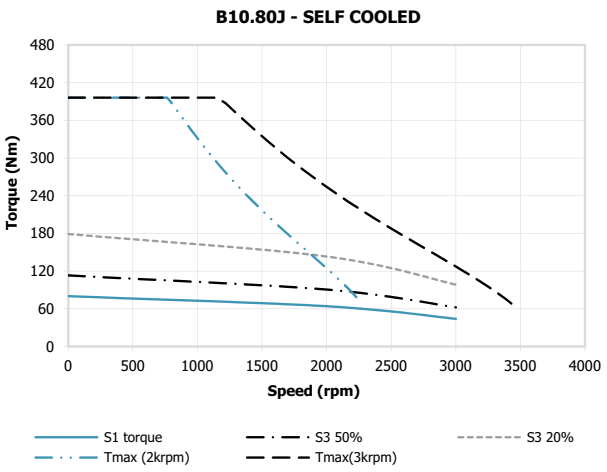

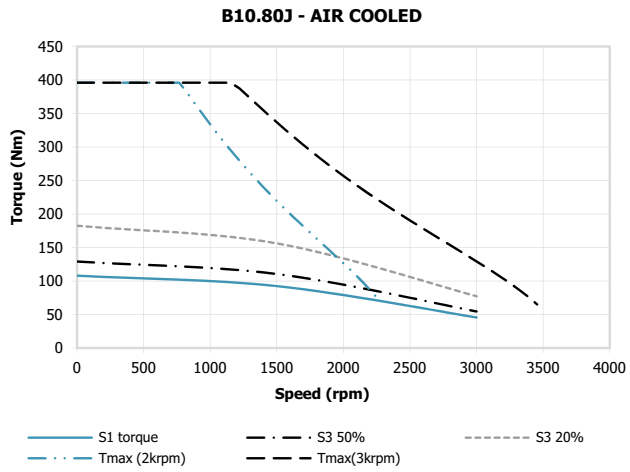

TYPE B132I - 6 POLES - 42 TO 73 Nm

FOR TYPE B132I - 6 POLES - 81 TO 120 Nm, PLEASE REFER TO PAGE 86

FOR MAINS VOLTAGE
400 V

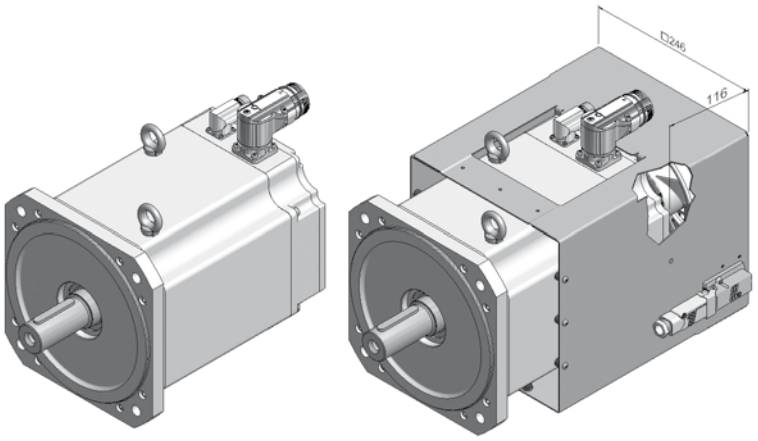

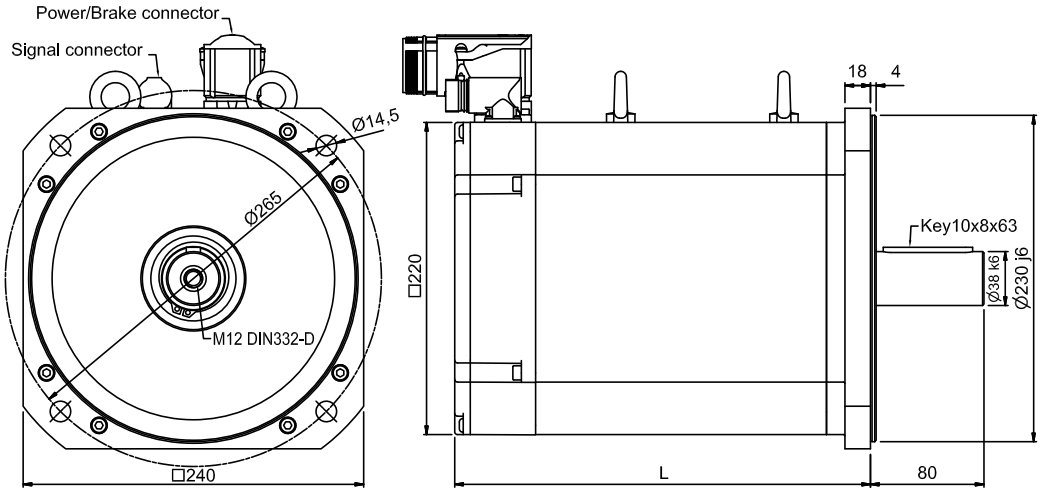

MECHANICAL DATA

Type	Torque Nm	Length with RESOLVER (L) Without brake	Length with RESOLVER (L) With brake	Maximum Length with ENCODER (L) Without brake	Maximum Length with ENCODER (L) With brake	Weight Kg Without brake	Weight Kg With brake
B13.42I	42	293	343	321	371	48	55
B13.58I	58	333	383	361	411	55	62
B13.73I	73	373	423	401	451	62	69

BRAKE DATA

Brake data	Symbol	Data	Unit
Holding torque 100°C	Mbr	120	Nm
Voltage	Ubr	24	Vdc +/- 10%
Resistance	Rbr	12.3	Ohm
Electrical Power	Pbr	50	W
Current	Ibr	2.08	Adc
Additional* Rotor Inertia	Jbr	52.87	kgcm2
Opening (release) time	to max	190	ms
Closing (fall in) time	tc max	90	ms
Additional* Motor weight	mbr	5.35	kg

* Additional values are related to the motor data when the brake is mounted to the motor of the respective size, these values differ from the brake data in unmounted condition!

TYPE B132I - 6 POLES - 42 TO 73 Nm

FOR TYPE B132I - 6 POLES - 81 TO 120 Nm, PLEASE REFER TO PAGE 86

FOR MAINS VOLTAGE
400 V

Type	Stall torque (Δt=105°C) M_o Nm	Rated speed n 1/min	Rated power P_n kW	Rated torque (Δt=105°C) M_n Nm	Peak torque M_{pk} Nm	Maximum speed n_{max} rpm	Moment of inertia J 10^{-4} Kgm²	Peak torque acceleration a_{pk} rad/sec²	Thermal time constant T_{th} min	Thermal protection threshold ϑ_{max} ° C	Voltage constant k_e Vs	Torque constant k_t Nm/A	Resistance phase to phase (20° C) R_W Ω	Inductance phase to phase L_W mH	B.E.M.F. at rated speed E_n Vrms	Stall current I_o Arms	Rated current I_n Arms	Power Connector Size
1500 min⁻¹ - Self Cooled																		
B13.42I	42	1500	5.6	35.5	120	3600	65	18462	50	140	1.88	3.26	0.90	16.9	296	12.9	10.9	7/1
B13.58I	58	1500	7.4	47.0	162	3600	90	18000	57	140	1.88	3.26	0.62	14.8	296	17.8	14.4	7/1
B13.73I	73	1500	9.2	58.5	204	3600	114	17895	65	140	1.88	3.26	0.45	12.5	296	22.4	17.9	7/1
2000 min⁻¹ - Self Cooled																		
B13.42I	42	2000	6.8	32.5	120	3600	65	18462	50	140	1.41	2.44	0.53	12.7	296	17.2	13.3	7/1
B13.58I	58	2000	9.0	43.0	162	3600	90	18000	57	140	1.41	2.44	0.36	8.6	296	23.7	17.6	7/1
B13.73I	73	2000	11.2	53.5	204	3600	114	17895	65	140	1.41	2.44	0.24	7.3	296	29.9	21.9	7/1.5
3000 min⁻¹ - Self Cooled																		
B13.42I	42	3000	8.6	27.5	120	3600	65	18462	50	140	0.94	1.63	0.23	5.4	296	25.8	16.9	7/1
B13.58I	58	3000	12.0	38.2	162	3600	90	18000	57	140	0.94	1.63	0.13	3.2	296	35.6	23.4	7/1.5
B13.73I	73	3000	15.4	48.9	204	3600	114	17895	65	140	0.94	1.63	0.10	2.6	296	44.8	30.0	7/1.5

Type	Stall torque (Δt=105°C) M_o Nm	Rated speed n 1/min	Rated power P_n kW	Rated torque (Δt=105°C) M_n Nm	Peak torque M_{pk} Nm	Maximum speed n_{max} rpm	Moment of inertia J 10^{-4} Kgm²	Peak torque acceleration a_{pk} rad/sec²	Thermal time constant T_{th} min	Thermal protection threshold ϑ_{max} ° C	Voltage constant k_e Vs	Torque constant k_t Nm/A	Resistance phase to phase (20° C) R_W Ω	Inductance phase to phase L_W mH	B.E.M.F. at rated speed E_n Vrms	Stall current I_o Arms	Rated current I_n Arms	Power Connector Size
1500 min⁻¹ - Air Cooled																		
B13.42I	61	1500	8.8	56.0	120	3600	65	18462	50	140	1.88	3.26	0.90	16.9	296	18.7	17.2	7/1
B13.58I	84	1500	12.2	77.5	162	3600	90	18000	57	140	1.88	3.26	0.62	14.8	296	25.8	23.8	7/1
B13.73I	105	1500	15.4	98.0	204	3600	114	17895	65	140	1.88	3.26	0.45	12.5	296	32.2	30.1	7/1.5
2000 min⁻¹ - Air Cooled																		
B13.42I	61	2000	11.2	53.4	120	3600	65	18462	50	140	1.41	2.44	0.53	12.7	296	25.0	21.8	7/1
B13.58I	84	2000	15.5	74.0	162	3600	90	18000	57	140	1.41	2.44	0.36	8.6	296	34.4	30.3	7/1.5
B13.73I	105	2000	19.8	94.5	204	3600	114	17895	65	140	1.41	2.44	0.24	7.3	296	43.0	38.7	7/1.5
3000 min⁻¹ - Air Cooled																		
B13.42I	61	3000	14.8	47.0	120	3600	65	18462	50	140	0.94	1.63	0.23	5.4	296	37.4	28.8	7/1.5
B13.58I	84	3000	21.0	66.8	162	3600	90	18000	57	140	0.94	1.63	0.13	3.2	296	51.5	41.0	7/1.5
B13.73I	105	3000	26.9	85.6	204	3600	114	17895	65	140	0.94	1.63	0.10	2.6	296	64.4	52.5	7/1.5

TYPE B132I - 6 POLES - 42 TO 73 Nm

FOR TYPE B132I - 6 POLES - 81 TO 120 Nm, PLEASE REFER TO PAGE 86

FOR MAINS VOLTAGE
400 V

B13.42I - SELF COOLED

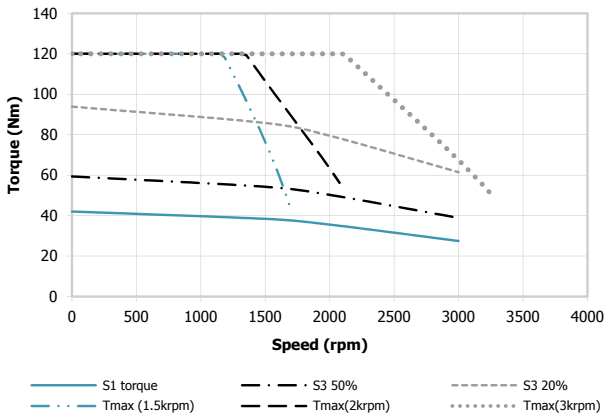

B13.42I - AIR COOLED

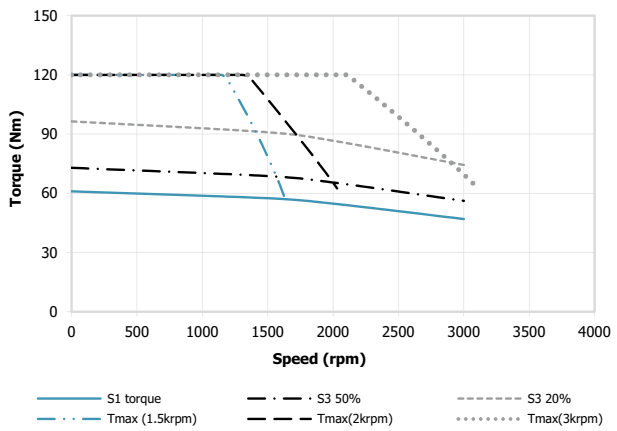

B13.58I - SELF COOLED

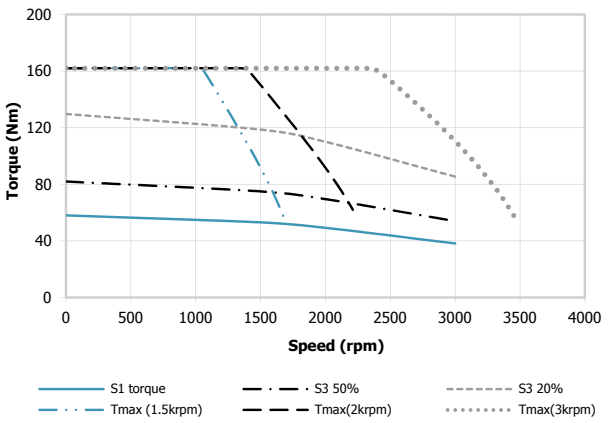

B13.58I - AIR COOLED

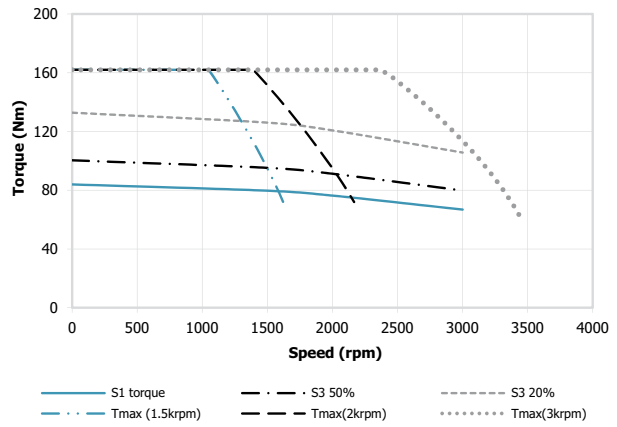

B13.73I - SELF COOLED

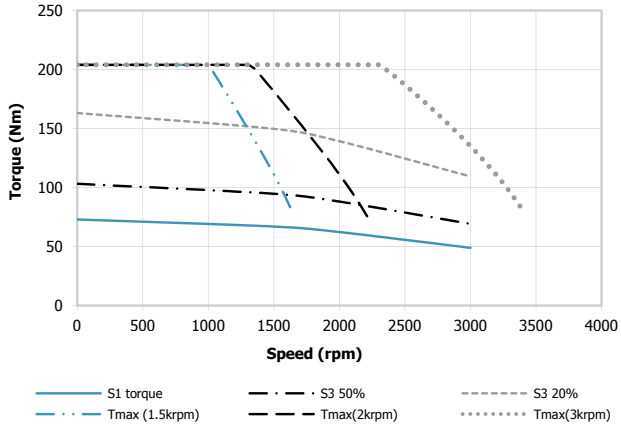

B13.73I - AIR COOLED

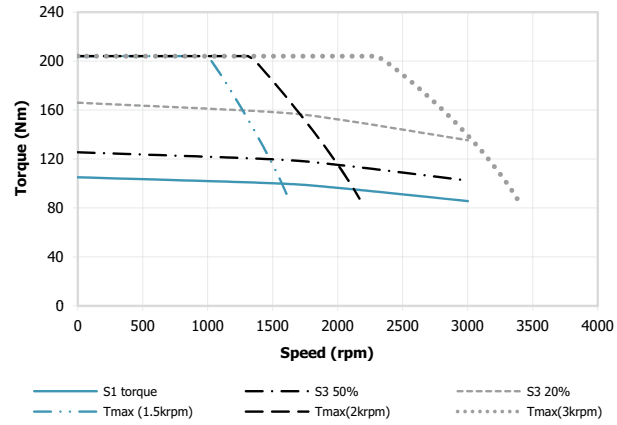

TYPE B132I - 6 POLES - 81 TO 120 Nm

FOR TYPE B132I - 6 POLES - 42 TO 73 Nm, PLEASE REFER TO PAGE 83

FOR MAINS VOLTAGE
400 V

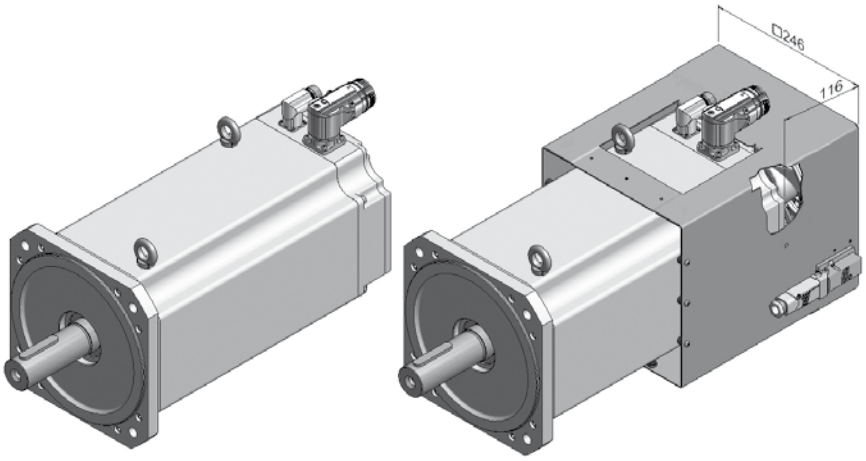

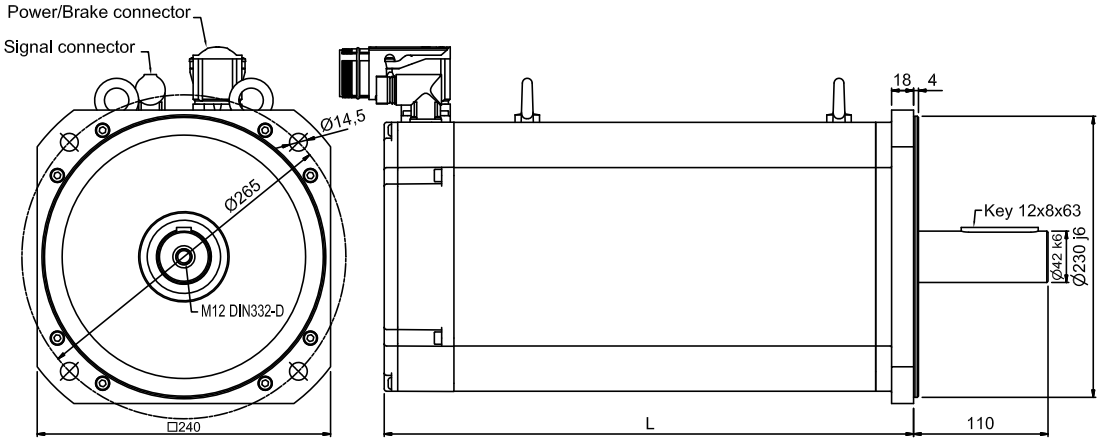

MECHANICAL DATA

Type	Torque Nm	Length with RESOLVER (L) Without brake	Length with RESOLVER (L) With brake	Maximum Length with ENCODER (L) Without brake	Maximum Length with ENCODER (L) With brake	Weight Kg Without brake	Weight Kg With brake
B13.81I	81	393	443	421	471	67.0	74.0
B13.98I	98	433	483	461	511	76.0	83.0
B13.C2I	120	493	543	521	571	92.0	99.0

BRAKE DATA

Brake data	Symbol	Data	Unit
Holding torque 100°C	Mbr	120	Nm
Voltage	Ubr	24	Vdc +/- 10%
Resistance	Rbr	12.3	Ohm
Electrical Power	Pbr	50	W
Current	Ibr	2.08	Adc
Additional* Rotor Inertia	Jbr	52.87	kgcm2
Opening (release) time	to max	190	ms
Closing (fall in) time	tc max	90	ms
Additional* Motor weight	mbr	5.35	kg

* Additional values are related to the motor data when the brake is mounted to the motor of the respective size, these values differ from the brake data in unmounted condition!

TYPE B132I - 6 POLES - 81 TO 120 Nm

FOR TYPE B132I - 6 POLES - 42 TO 73 Nm, PLEASE REFER TO PAGE 83

FOR MAINS VOLTAGE
400 V

Type	Stall torque (Δt=105°C) M_o Nm	Rated speed n 1/min	Rated power P_n kW	Rated torque (Δt=105°C) M_n Nm	Peak torque M_{pk} Nm	Maximum speed n_{max} rpm	Moment of inertia J 10^{-4} Kgm²	Peak torque acceleration a_{pk} rad/sec²	Thermal time constant T_{th} min	Thermal protection threshold ϑ_{max} ° C	Voltage constant k_e Vs	Torque constant k_t Nm/A	Resistance phase to phase (20° C) R_W Ω	Inductance phase to phase L_W mH	B.E.M.F. at rated speed E_n Vrms	Stall current I_o Arms	Rated current I_n Arms	Power Connector Size
1500 min⁻¹ - Self Cooled																		
B13.81I	81	1500	10.2	65.0	231	3600	126	18333	70	140	1.88	3.26	0.39	11.5	296	24.8	19.9	7/1
B13.98I	98	1500	12.2	77.5	280	3600	150	18667	80	140	1.88	3.26	0.33	9.4	296	30.1	23.8	7/1.5
B13.C2I	120	1500	14.8	94.5	345	3600	192	17969	90	140	1.88	3.26	0.20	6.1	296	36.8	29.0	7/1.5
2000 min⁻¹ - Self Cooled																		
B13.81I	81	2000	12.6	60.0	231	3600	126	18333	70	140	1.41	2.44	0.22	6.5	296	33.1	24.6	7/1.5
B13.98I	98	2000	15.2	72.5	280	3600	150	18667	80	140	1.41	2.44	0.17	4.9	296	40.1	29.7	7/1.5
B13.C2I	120	2000	17.9	85.5	345	3600	192	17969	90	140	1.41	2.44	0.12	3.9	296	49.1	35.0	7/1.5
3000 min⁻¹ - Self Cooled																		
B13.81I	81	3000	16.8	53.5	231	3600	126	18333	70	140	0.94	1.63	0.10	2.9	296	49.7	32.8	7/1.5
B13.98I	98	3000	19.0	60.5	280	3600	150	18667	80	140	0.94	1.63	0.08	2.2	296	60.1	37.1	7/1.5
B13.C2I	120	3000	21.0	67.0	345	3600	192	17969	90	140	0.94	1.63	0.05	1.7	296	73.6	41.1	3/M10

Type	Stall torque (Δt=105°C) M_o Nm	Rated speed n 1/min	Rated power P_n kW	Rated torque (Δt=105°C) M_n Nm	Peak torque M_{pk} Nm	Maximum speed n_{max} rpm	Moment of inertia J 10^{-4} Kgm²	Peak torque acceleration a_{pk} rad/sec²	Thermal time constant T_{th} min	Thermal protection threshold ϑ_{max} ° C	Voltage constant k_e Vs	Torque constant k_t Nm/A	Resistance phase to phase (20° C) R_W Ω	Inductance phase to phase L_W mH	B.E.M.F. at rated speed E_n Vrms	Stall current I_o Arms	Rated current I_n Arms	Power Connector Size
1500 min⁻¹ - Air Cooled																		
B13.81I	116	1500	17.1	109.0	231	3600	126	18333	70	140	1.88	3.26	0.39	11.5	296	35.6	33.4	7/1.5
B13.98I	136	1500	19.6	125.0	280	3600	150	18667	80	140	1.88	3.26	0.33	9.4	296	41.7	38.3	7/1.5
B13.C2I	162	1500	22.3	142.0	345	3600	192	17969	90	140	1.88	3.26	0.20	6.1	296	49.7	43.6	7/1.5
2000 min⁻¹ - Air Cooled																		
B13.81I	116	2000	22.0	105.0	231	3600	126	18333	70	140	1.41	2.44	0.22	6.5	296	47.5	43.0	7/1.5
B13.98I	136	2000	25.1	120.0	280	3600	150	18667	80	140	1.41	2.44	0.17	4.9	296	55.6	49.1	7/1.5
B13.C2I	162	2000	28.3	135.0	345	3600	192	17969	90	140	1.41	2.44	0.12	3.9	296	66.3	55.2	7/1.5
3000 min⁻¹ - Air Cooled																		
B13.81I	116	3000	29.8	95.0	231	3600	126	18333	70	140	0.94	1.63	0.10	2.9	296	71.2	58.3	3/M10

TYPE B132I - 6 POLES - 81 TO 120 Nm

FOR TYPE B132I - 6 POLES - 42 TO 73 Nm, PLEASE REFER TO PAGE 83

FOR MAINS VOLTAGE
400 V

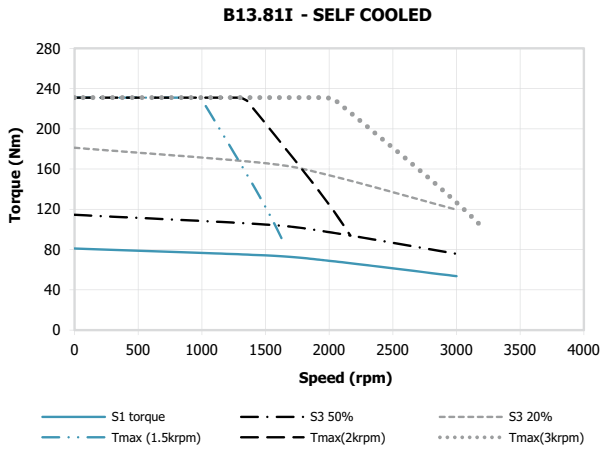

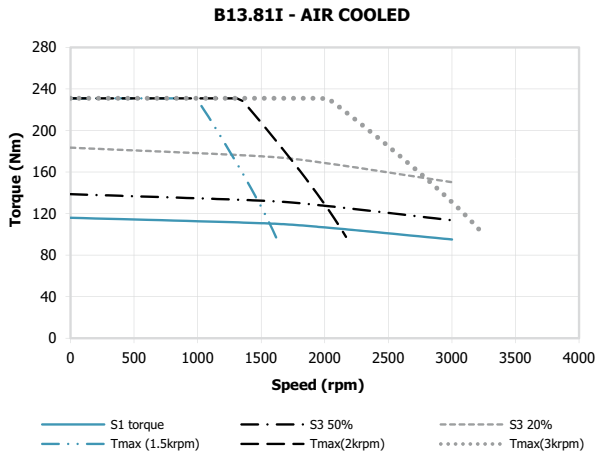

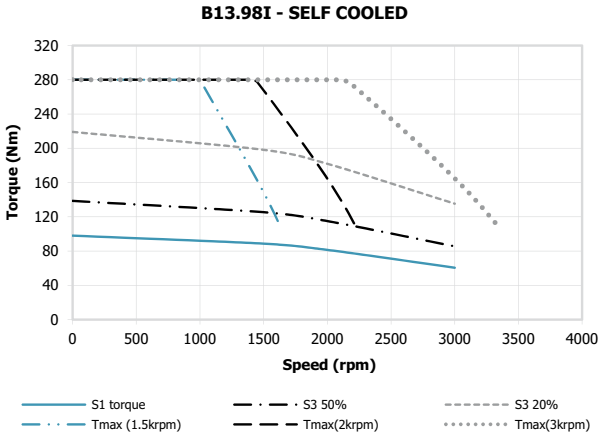

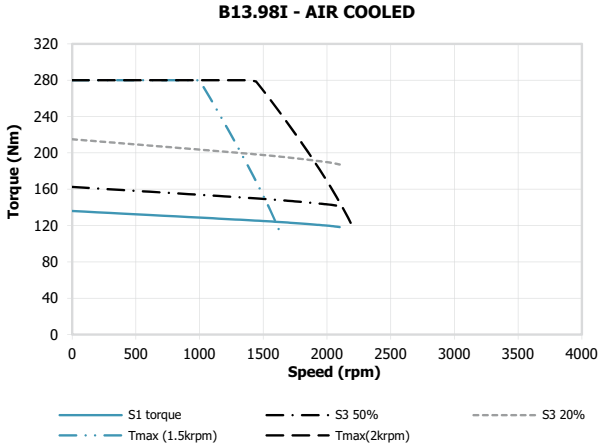

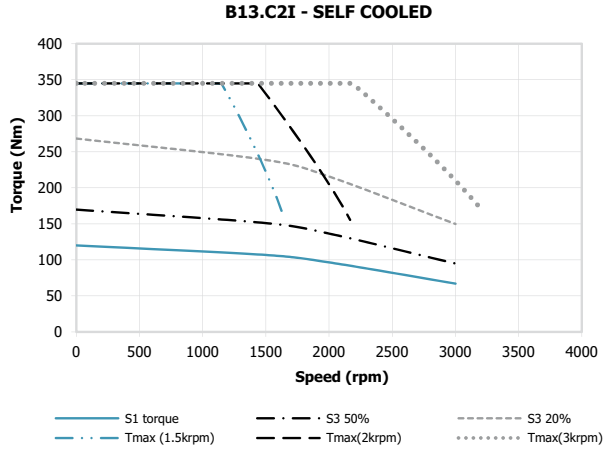

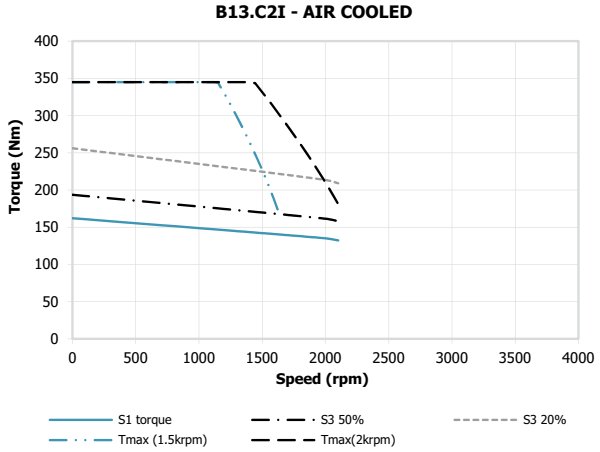

TYPE B160Q - 8 POLES

FOR MAINS VOLTAGE
400 V

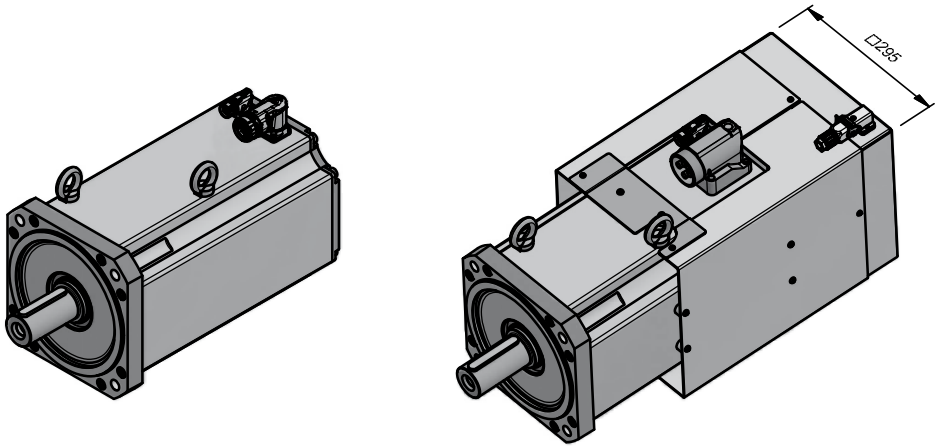

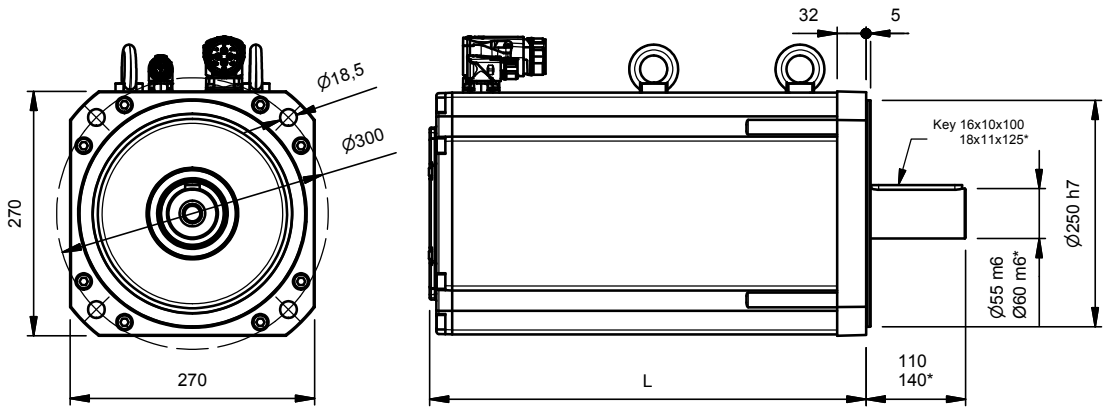

* ONLY FOR TYPE B16.300Q

MECHANICAL DATA

	Torque	Length with RESOLVER (L) Without brake		Maximum Length with ENCODER (L) Without brake		Weight Kg Without brake	
Type	Nm	Self cooled	Air cooled	Self cooled	Air cooled	Self cooled	Air cooled
B16.C4Q	140	422	597	450	597	119	128.5
B16.C8Q	180	482	657	510	657	140	149.5
B16.B4Q	240	572	747	600	747	173	184.5
B16.300Q	300	662	837	690	837	205	216.5

BRAKE DATA

Brake data	Symbol	Data	Unit
Holding torque 100°C	Mbr	300	Nm
Voltage	Ubr	24	Vdc +/- 10%
Resistance	Rbr	13.7	Ohm
Electrical Power	Pbr	41.8	W
Current	Ibr	1.75	Adc
Additional* Rotor Inertia	Jbr	200	kgcm2
Opening (release) time	to max	350	ms
Closing (fall in) time	tc max	300	ms
Additional* Motor weight	mbr	12.9	kg

* Additional values are related to the motor data when the brake is mounted to the motor of the respective size, these values differ from the brake data in unmounted condition!

FOR MAINS VOLTAGE
400 V

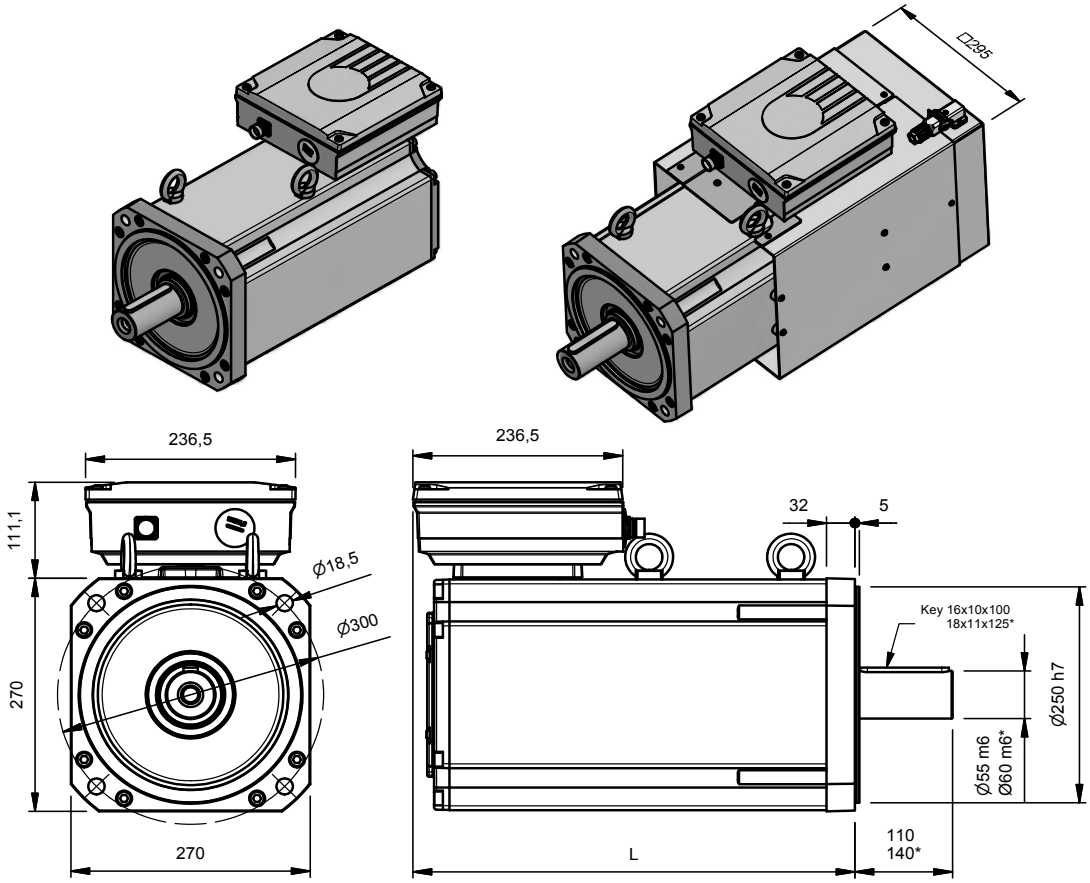

* ONLY FOR TYPE B16.300Q

MECHANICAL DATA

	Torque	Length with RESOLVER (L) Without brake		Maximum Length with ENCODER (L) Without brake		Weight Kg Without brake	
Type	Nm	Self cooled	Air cooled	Self cooled	Air cooled	Self cooled	Air cooled
B16.C4Q	140	438	597	450	597	122.5	132
B16.C8Q	180	498	657	510	657	143.5	153
B16.B4Q	240	588	747	600	747	176.5	188
B16.300Q	300	678	837	690	837	208.5	220

BRAKE DATA

Brake data	Symbol	Data	Unit
Holding torque 20°C	Mbr	300	Nm
Voltage	Ubr	24	Vdc +/- 10%
Resistance	Rbr	13.7	Ohm
Electrical Power	Pbr	41.8	W
Current	Ibr	1.75	Adc
Additional* Rotor Inertia	Jbr	200	kgcm2
Opening (release) time	to max	350	ms
Closing (fall in) time	tc max	300	ms
Additional* Motor weight	mbr	12.9	kg

* Additional values are related to the motor data when the brake is mounted to the motor of the respective size, these values differ from the brake data in unmounted condition!

FOR MAINS VOLTAGE
400 V

Type	Stall torque (Δt=105°C) M_o Nm	Rated speed n 1/min	Output rated speed P_n kW	Rated torque (Δt=105°C) M_n Nm	Peak torque M_{pk} Nm	Maximum speed n_{max} rpm	Moment of inertia J 10^{-4} Kgm²	Peak torque acceleration a_{pk} rad/sec²	Thermal time constant T_{th} min	Thermal protection threshold ϑ_{max} °C	Voltage constant k_e Vs	Torque constant k_t Nm/A	Resistance phase to phase (20°C) R_w Ω	Industance phase to phase L_w mH	B.E.M.F. at rated speed E_n Vrms	Stall current I_o Arms	Rated current I_n Arms	Power connector size
1500 min⁻¹ - Self Cooled																		
B16.C4Q	140	1500	17	110	475	3800	290	16379	63	140	1.88	3.26	0.158	4.70	296	43	34	7/1.5
B16.C8Q	180	1500	22	140	650	3800	373	17426	65	140	1.88	3.26	0.093	3.10	296	55	43	7/1.5
B16.B4Q	240	1500	29	183	900	3800	497	18109	67	140	1.88	3.26	0.062	2.20	296	74	56	3/M10
B16.300Q	300	1500	36	229	1150	3800	622	18489	69	140	1.88	3.26	0.045	1.70	296	92	70	3/M10
2000 min⁻¹ - Self Cooled																		
B16.C4Q	140	2000	18	86	475	3800	290	16379	63	140	1.41	2.44	0.080	2.38	296	57	35	7/1.5
B16.C8Q	180	2000	24	115	650	3800	373	17426	65	140	1.41	2.44	0.057	1.96	296	74	47	3/M10
B16.B4Q	240	2000	31	148	900	3800	497	18109	67	140	1.41	2.44	0.037	1.40	296	98	61	3/M10
B16.300Q	300	2000	40	191	1150	3800	622	18489	69	140	1.41	2.44	0.026	1.15	296	123	78	3/M10
3000 min⁻¹ - Self Cooled																		
B16.C4Q	140	3000	14	45	475	3800	290	16379	63	140	0.94	1.63	0.035	1.06	296	86	28	3/M10
B16.C8Q	180	3000	22	69	650	3800	373	17426	65	140	0.94	1.63	0.024	0.81	296	111	42	3/M10
B16.B4Q*	240	3000	28	88	900	3800	497	18109	67	140	0.94	1.63	0.019	0.69	296	147	54	3/M10
B16.300Q*	300	2500	39	150	1150	3800	622	18489	69	140	1.13	1.96	0.016	0.65	296	153	77	3/M10

Type	Stall torque (Δt=105°C) M_o Nm	Rated speed n 1/min	Output rated speed P_n kW	Rated torque (Δt=105°C) M_n Nm	Peak torque M_{pk} Nm	Maximum speed n_{max} rpm	Moment of inertia J 10^{-4} Kgm²	Peak torque acceleration a_{pk} rad/sec²	Thermal time constant T_{th} min	Thermal protection threshold ϑ_{max} °C	Voltage constant k_e Vs	Torque constant k_t Nm/A	Resistance phase to phase (20°C) R_w Ω	Industance phase to phase L_w mH	B.E.M.F. at rated speed E_n Vrms	Stall current I_o Arms	Rated current I_n Arms	Power connector size
1500 min⁻¹ - Air Cooled																		
B16.C4Q	180	1500	25	160	475	3800	290	16379	63	140	1.88	3.26	0.158	4.70	296	55	49	7/1.5
B16.C8Q	234	1500	33	208	650	3800	373	17426	65	140	1.88	3.26	0.093	3.10	296	72	64	3/M10
B16.B4Q	312	1500	44	280	900	3800	497	18109	67	140	1.88	3.26	0.062	2.22	296	96	86	3/M10
B16.300Q	390	1500	55	350	1150	3800	622	18489	69	140	1.88	3.26	0.045	1.70	296	120	107	3/M10
2000 min⁻¹ - Air Cooled																		
B16.C4Q	180	2000	32	155	475	3800	290	16379	63	140	1.41	2.44	0.080	2.38	296	74	63	3/M10
B16.C8Q	234	2000	42	200	650	3800	373	17426	65	140	1.41	2.44	0.057	1.96	296	96	82	3/M10
B16.B4Q	312	2000	57	270	900	3800	497	18109	67	140	1.41	2.44	0.037	1.40	296	128	111	3/M10
B16.300Q	390	2000	70	335	1150	3800	622	18489	69	140	1.41	2.44	0.026	1.15	296	160	137	3/M10
3000 min⁻¹ - Air Cooled																		
B16.C4Q	180	3000	35	113	475	3800	290	16379	63	140	0.94	1.63	0.035	1.06	296	111	69	3/M10
B16.C8Q	234	3000	52	166	650	3800	373	17426	65	140	0.94	1.63	0.024	0.81	296	144	102	3/M10
B16.B4Q*	312	3000	66	211	900	3800	497	18109	67	140	0.94	1.63	0.019	0.69	296	192	130	3/M12
B16.300Q*	390	2500	79	300	1150	3800	622	18489	69	140	1.13	1.96	0.016	0.65	296	199	153	3/M12

* These types need to be supplied by 2 power cables in parallel
** In case of motor with oil seal, the maximum speed (nmax) is 3100 rpm instead of 3800 rpm
*** TB = terminal box design

FOR MAINS VOLTAGE
400 V

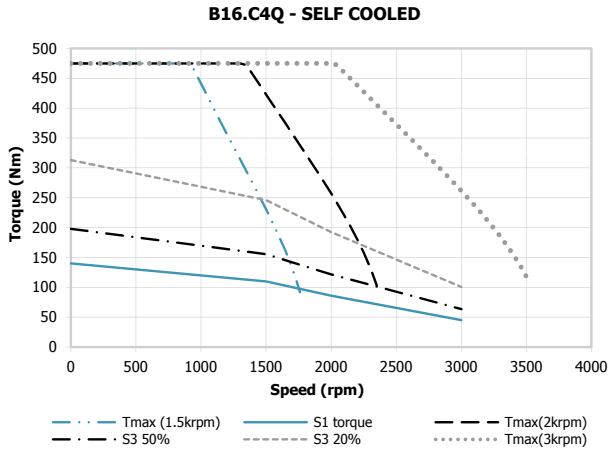

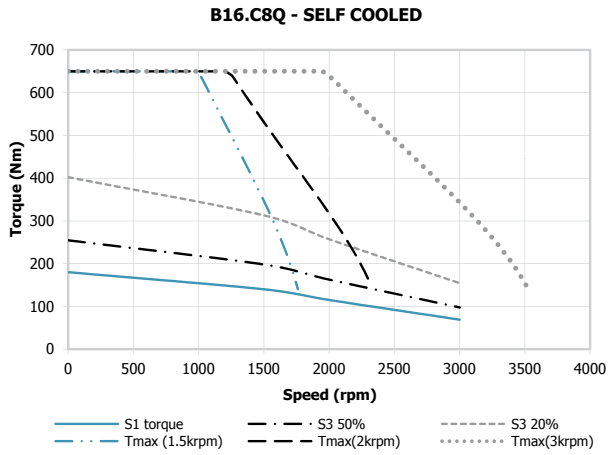

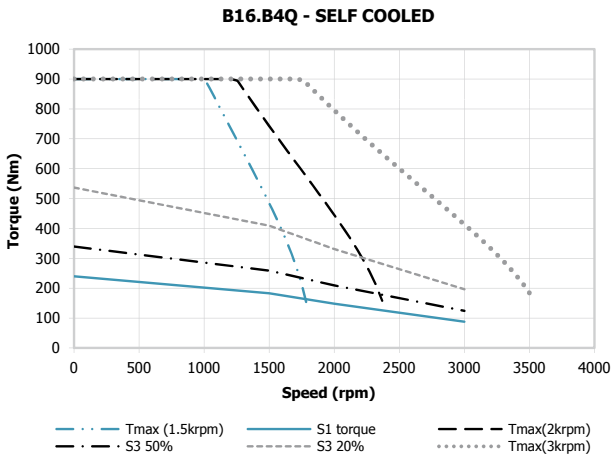

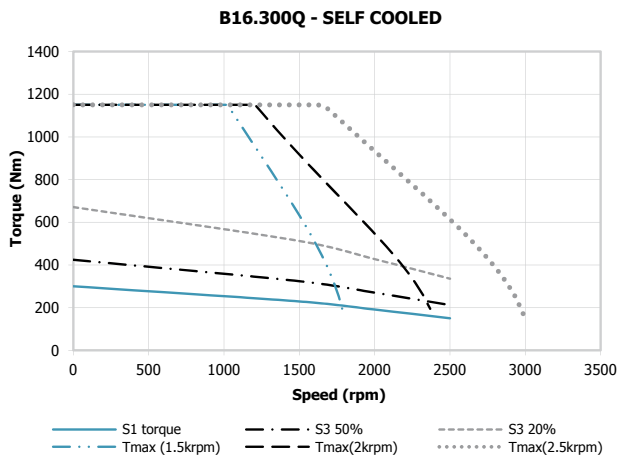

FOR MAINS VOLTAGE
400 V

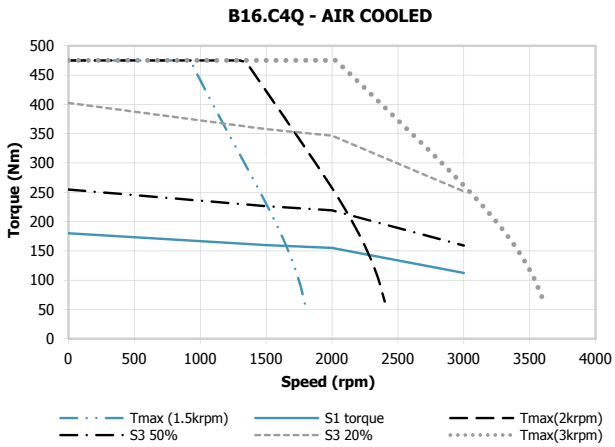

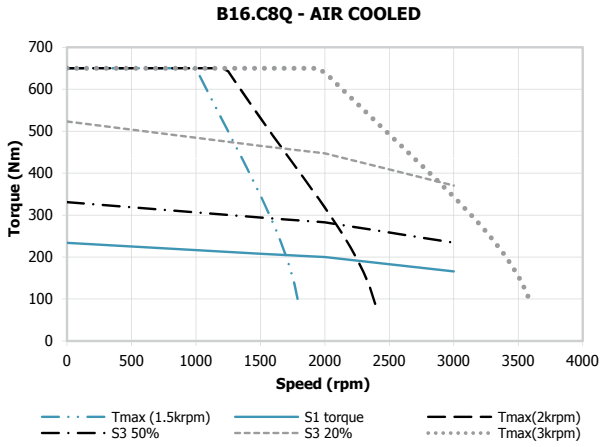

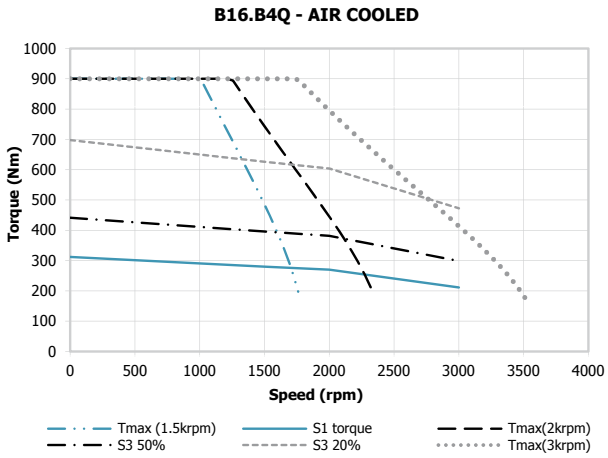

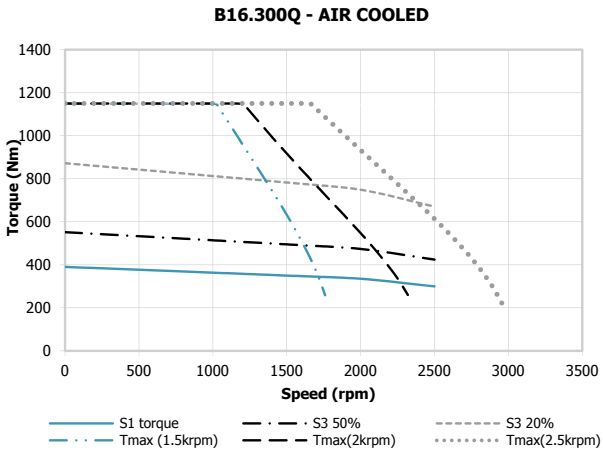

TORQUE MOTORS

FOR MAINS VOLTAGE
400 V

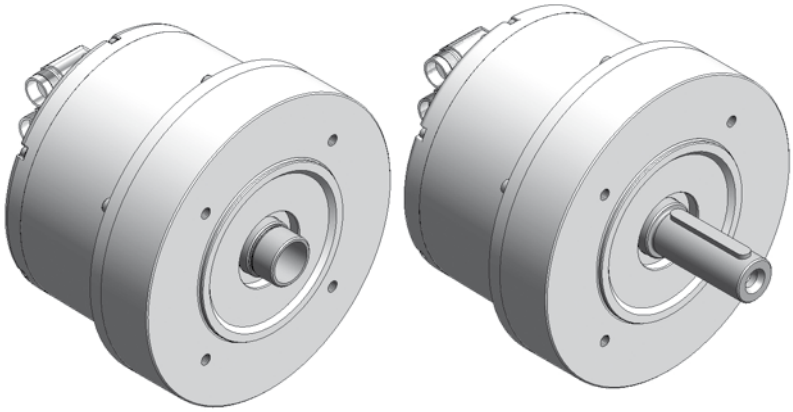

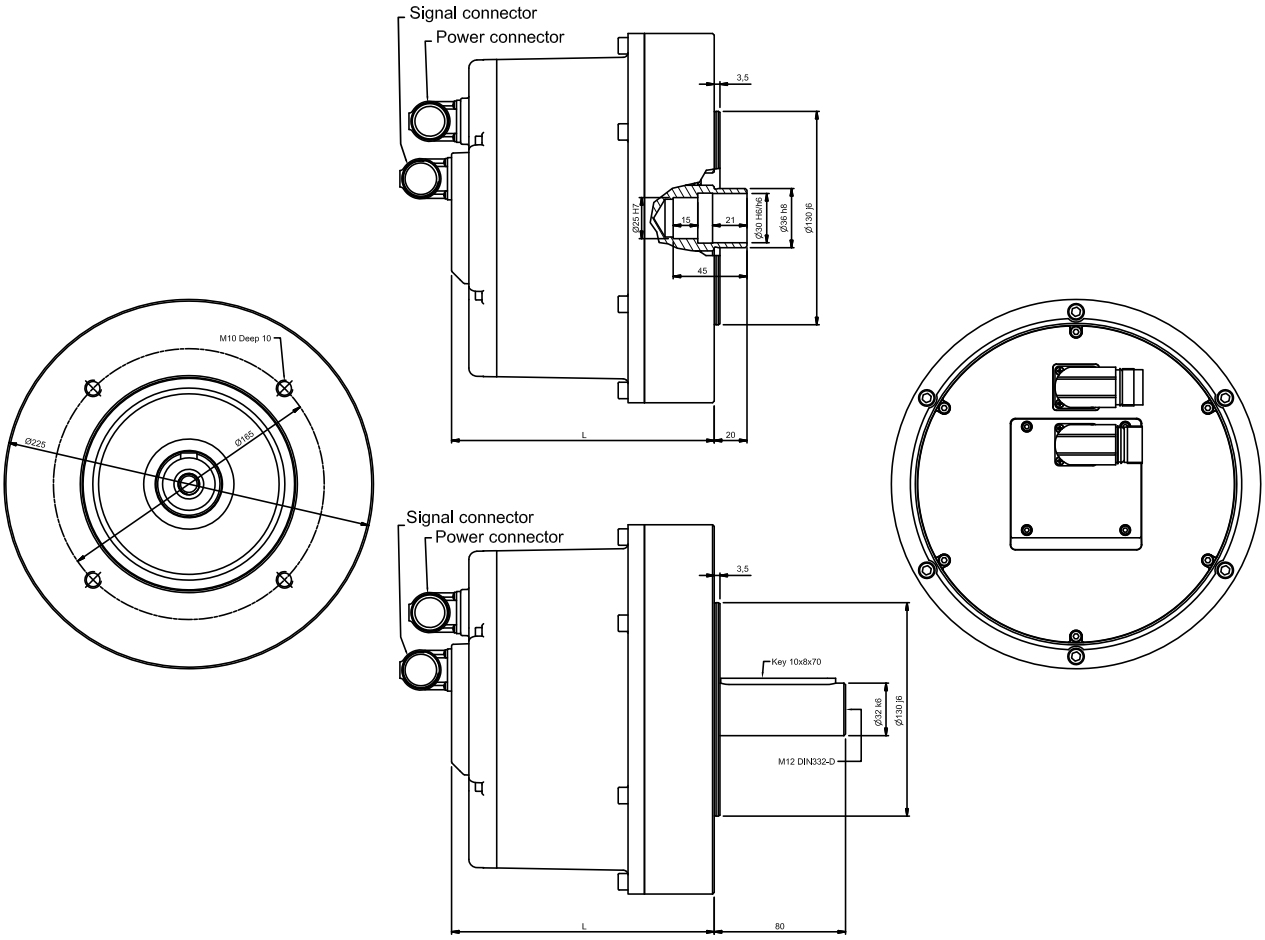

MECHANICAL DATA

Type	Torque Nm	With RESOLVER (L) Length mm	With RESOLVER (L) Weight kg	With ENCODER (L) Length mm	With ENCODER (L) Weight kg
B10.10P	10	160	15.0	190	15.0
B10.20P	20	160	17.5	190	17.5

TYPE B10P - 12 POLES

FOR MAINS VOLTAGE
400 V

Type	Stall torque (Δt=105°C)	Rated speed	Rated power	Rated torque (Δt=105°C)	Peak torque	Maximum speed	Moment of inertia	Peak torque acceleration	Thermal time constant	Thermal protection threshold	Voltage constant	Torque constant	Resistance phase to phase (20°C)	Inductance phase to phase	B.E.M.F. at rated speed	Stall current	Rated current
	M_o	n	P_n	M_n	M_{pk}	n_{max}	J	a_{pk}	T_{th}	ϑ_{max}	k_e	k_t	R_w	L_w	E_n	I_o	I_n
	Nm	1/min	kW	Nm	Nm	rpm	10^{-4} Kgm^2	rad/sec^2	min	°C	Vs	Nm/A	Ω	mH	Vrms	Arms	Arms
500 min^{-1}																	
B10.10P	10	500	0.5	9.6	45	1500	40	11250	40	140	5.60	9.67	45.1	165.4	293	1.03	0.99
B10.20P	20	500	1.0	19.0	90	1500	80	11250	40	140	5.60	9.67	14.4	82.7	293	2.06	1.96
1000 min^{-1}																	
B10.10P	10	1000	0.8	8.0	45	1500	40	11250	40	140	2.80	4.85	11.3	41.4	293	2.06	1.65
B10.20P	20	1000	1.6	15.8	90	1500	80	11250	40	140	2.80	4.85	3.6	20.7	293	4.12	3.26

* The value of inertia is approximate, because it is deeply depending on the type of coupling chosen by the customer.
** The value of stall and rated torque are approximate and depending on the type of coupling system chosen for the application.

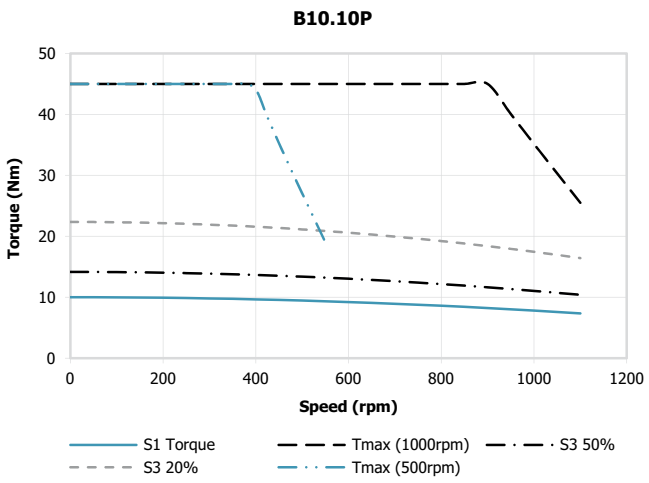

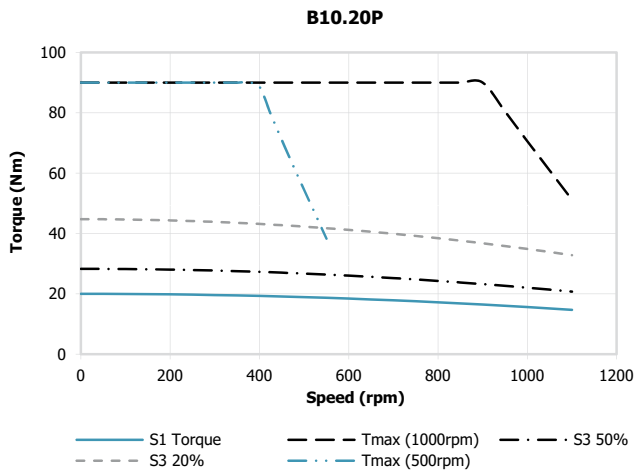

FOR MAINS VOLTAGE
400 V

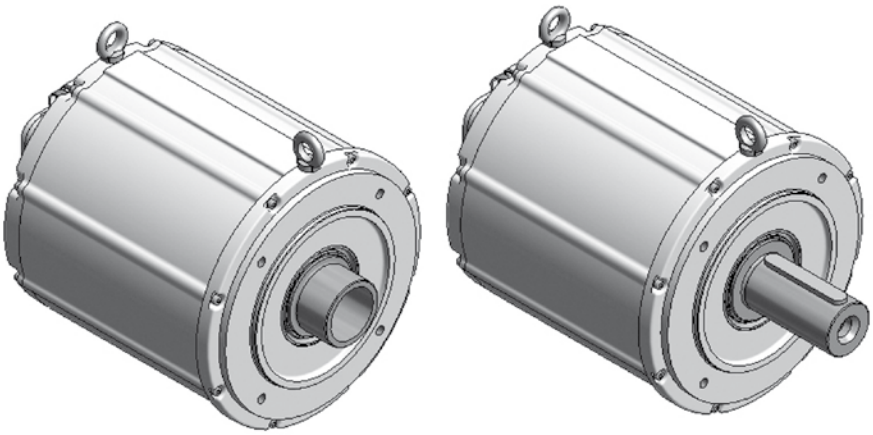

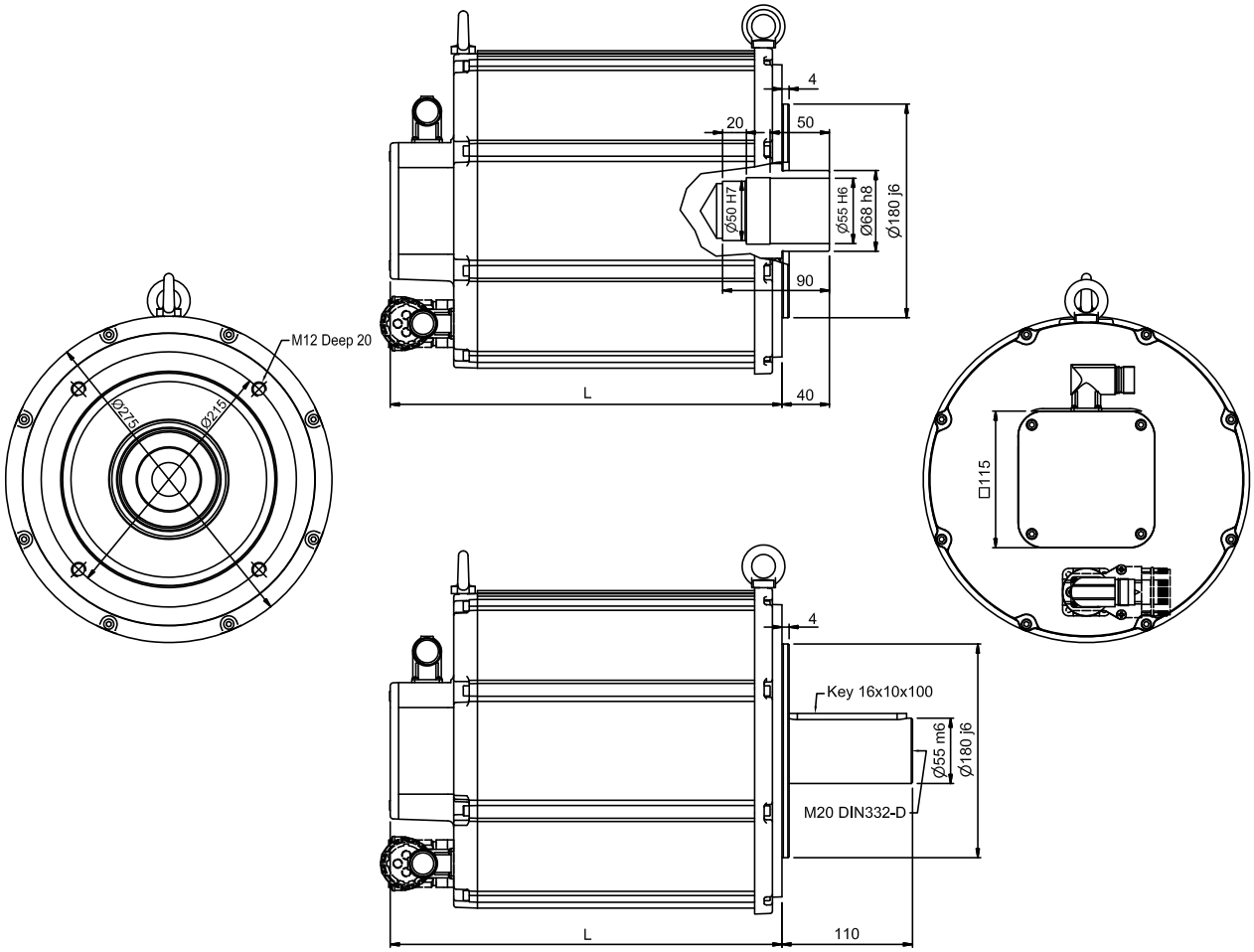

MECHANICAL DATA

Type	Torque Nm	Length (L) mm	Weight Kg
B16.50P	50	230	33.0
B16.C0P	100	280	50.0
B16.C5P	150	330	67.0
B16.B0P	200	380	84.0

FOR MAINS VOLTAGE
400 V

Type	Stall torque (Δt=105°C) M_o Nm	Rated speed n 1/min	Rated power P_n kW	Rated torque (Δt=105°C) M_n Nm	Peak torque M_{pk} Nm	Maximum speed n_{max} rpm	Moment of inertia J 10^{-4} Kgm^2	Peak torque acceleration a_{pk} rad/sec^2	Thermal time constant T_{th} min	Thermal protection threshold ϑ_{max} °C	Voltage constant k_e Vs	Torque constant k_t Nm/A	Resistance phase to phase (20°C) R_w Ω	Inductance phase to phase L_w mH	B.E.M.F. at rated speed E_n Vrms	Stall current I_o Arms	Rated current I_n Arms
300 min^{-1}																	
B16.50P	50	300	1.5	48	173	1200	409	4230	50	140	9.70	16.80	10.9	82.6	305	3.0	2.9
B16.C0P	100	300	3.0	95	345	1200	784	4401	70	140	9.70	16.80	4.25	39.9	305	6.0	5.7
B16.C5P	150	300	4.5	142	510	1200	1159	4400	90	140	9.70	16.80	2.82	27.5	305	8.9	8.5
B16.B0P	200	300	5.9	188	680	1200	1534	4433	110	140	9.70	16.80	1.97	20.9	305	11.9	11.2
500 min^{-1}																	
B16.50P	50	500	2.4	45	173	1200	409	4230	50	140	5.80	10.05	3.72	29.0	305	5.0	4.5
B16.C0P	100	500	4.7	90	345	1200	784	4401	70	140	5.80	10.05	1.63	15.1	305	10.0	9.0
B16.C5P	150	500	7.1	135	510	1200	1159	4400	90	140	5.80	10.05	0.96	9.41	305	14.9	13.4
B16.B0P	200	500	9.4	180	680	1200	1534	4433	110	140	5.80	10.05	0.72	7.40	305	19.9	17.9
1000 min^{-1}																	
B16.50P	50	1000	4.1	39	173	1200	409	4230	50	140	2.85	4.94	0.82	6.6	298	10.1	7.9
B16.C0P	100	1000	8.1	77	345	1200	784	4401	70	140	2.85	4.94	0.40	3.42	298	20.3	15.6
B16.C5P	150	1000	12.1	116	510	1200	1159	4400	90	140	2.85	4.94	0.24	2.42	298	30.4	23.5
B16.B0P	200	1000	16.0	153	680	1200	1534	4433	110	140	2.85	4.94	0.17	1.76	298	40.5	31.0

* The value of inertia is approximate, because it is deeply depending on the type of coupling chosen by the customer.
** The value of stall and rated torque are approximate and depending on the type of coupling system chosen for the application.

FOR MAINS VOLTAGE
400 V

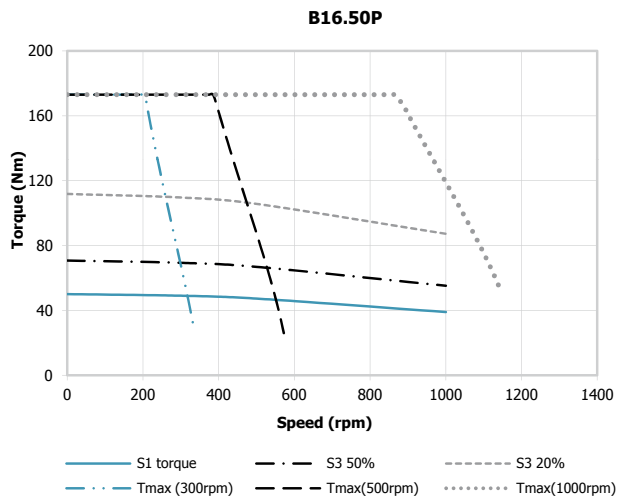

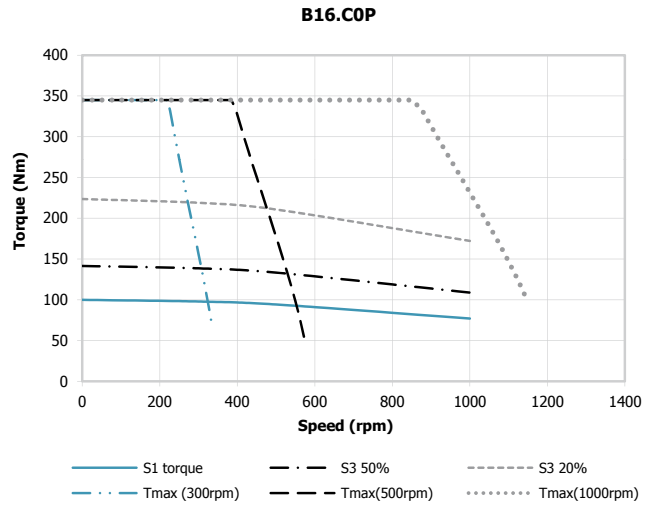

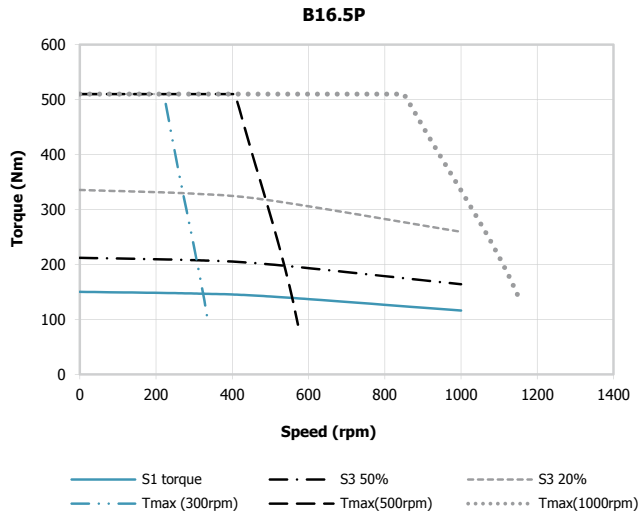

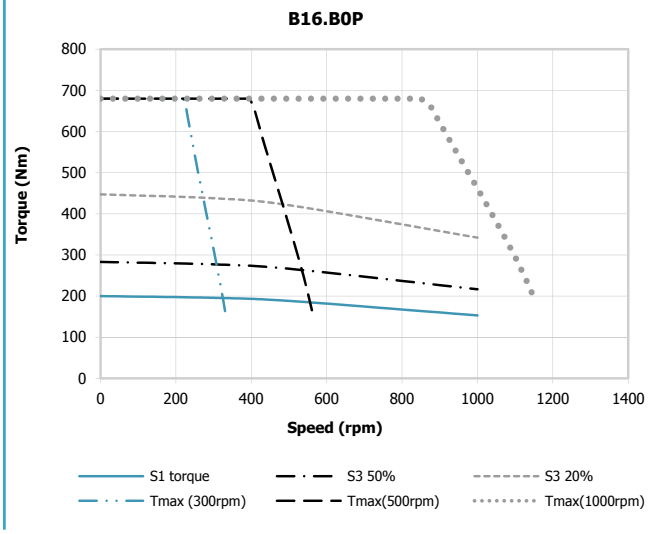

FOR MAINS VOLTAGE
400 V

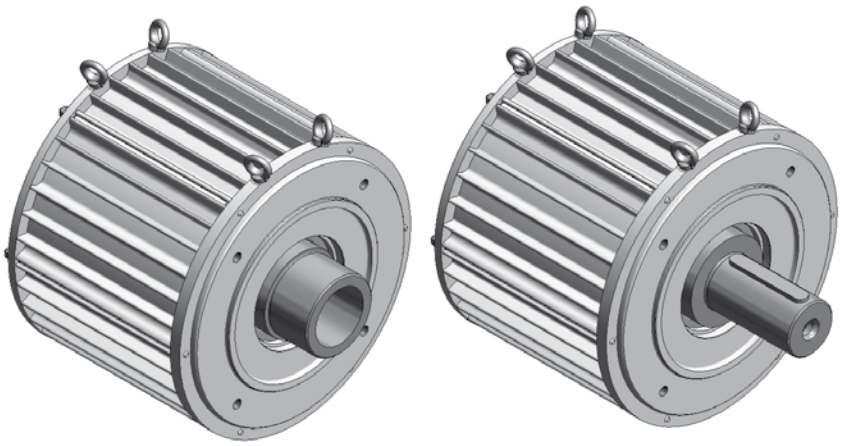

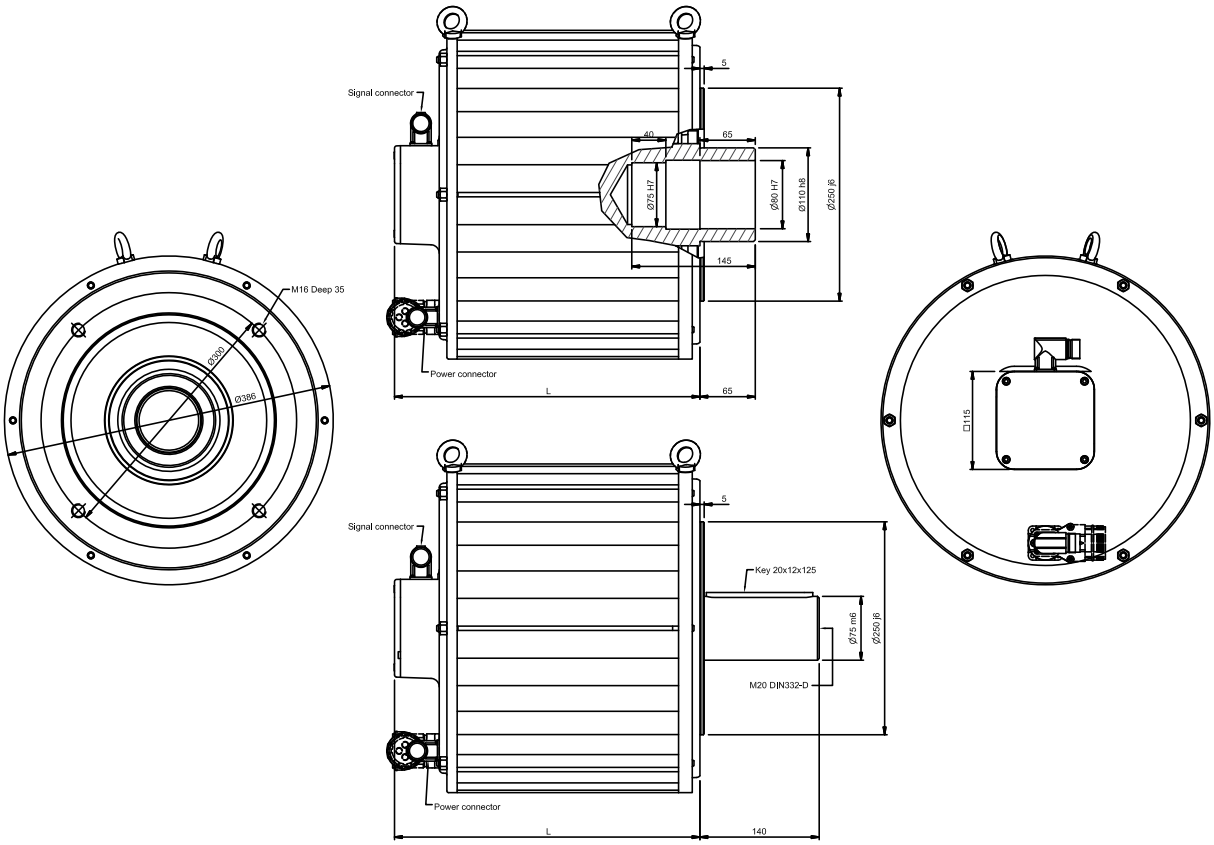

MECHANICAL DATA

Type	Torque Nm	Length (L) mm	Weight Kg
B18.CBP	115	259	63
B18.BCP	225	309	89
B18.325P	325	359	115
B18.420P	420	409	141
B18.510P	510	459	167

FOR MAINS VOLTAGE
400 V

Type	Stall torque (Δt=105°C)	Rated speed	Rated power	Rated torque (Δt=105°C)	Peak torque	Maximum speed	Moment of inertia	Peak torque acceleration	Thermal time constant	Thermal protection threshold	Voltage constant	Torque constant	Resistance phase to phase (20°C)	Inductance phase to phase	B.E.M.F. at rated speed	Stall current	Rated current
	M_o	n	P_n	M_n	M_{pk}	n_{max}	J	a_{pk}	T_{th}	ϑ_{max}	k_e	k_t	R_w	L_w	E_n	I_o	I_n
	Nm	1/min	kW	Nm	Nm	rpm	10^{-4} Kgm^2	rad/sec^2	min	°C	Vs	Nm/A	Ω	mH	Vrms	Arms	Arms
300 min^{-1}																	
B18.CBP	115	300	3.1	100	345	700	1600	2156	68	140	9.4	16.3	1.90	33.1	295	7.1	6.1
B18.BCP	225	300	6.2	196	703	700	3000	2343	95	140	9.4	16.3	0.91	17.9	295	13.8	12.0
B18.325P	325	300	8.3	263	1054	700	4400	2395	122	140	9.4	16.3	0.53	11.4	295	20.0	16.2
B18.420P	420	300	9.1	290	1405	700	5800	2422	150	140	9.4	16.3	0.38	8.7	295	25.8	17.8
B18.510P	510	300	9.9	315	1750	700	7200	2431	177	140	9.4	16.3	0.33	7.1	295	31.3	19.3

* The value of inertia is approximate, because it is deeply depending on the type of coupling chosen by the customer.
** The value of stall and rated torque are approximate and depending on the type of coupling system chosen for the application.

FOR MAINS VOLTAGE
400 V

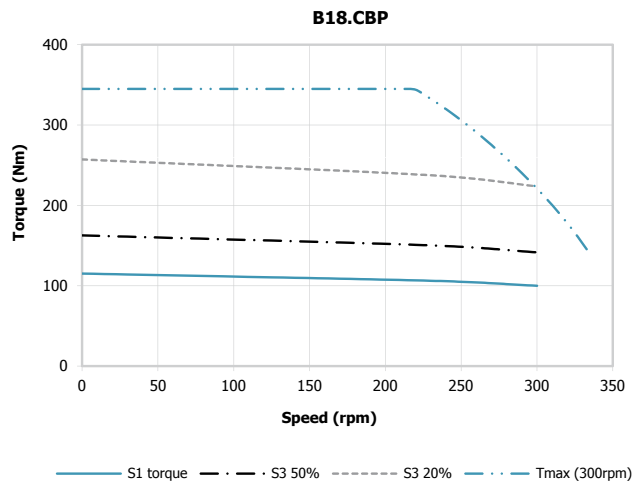

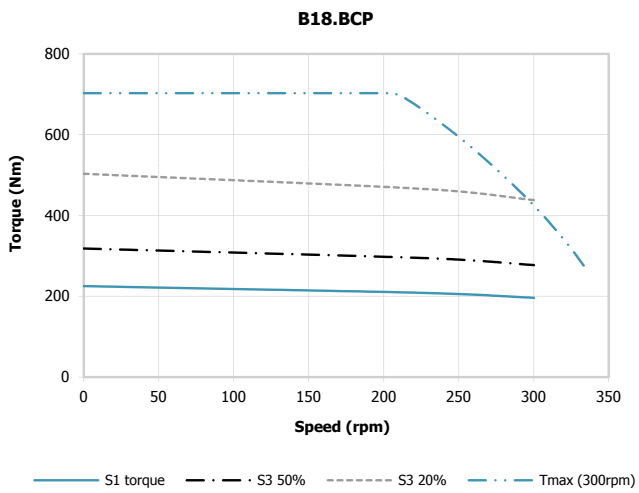

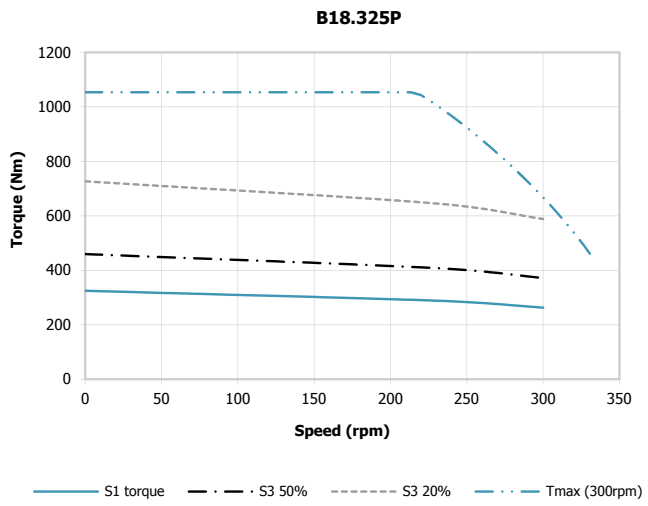

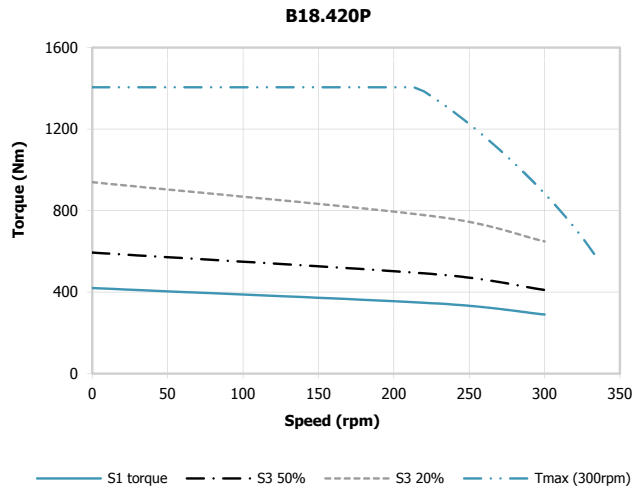

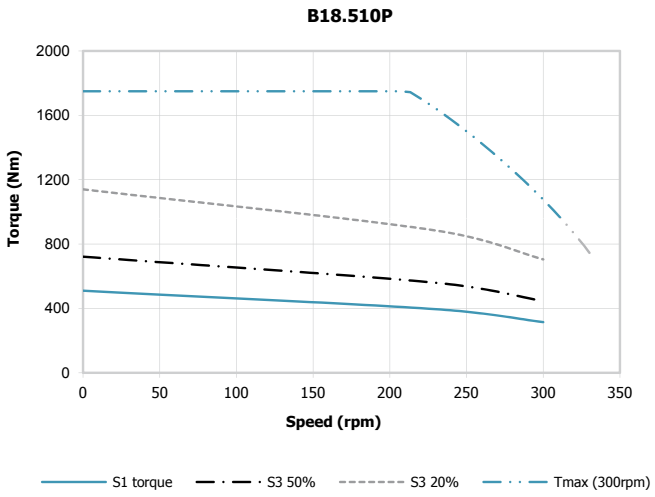

FSC
www.fsc.org
MIX
Paper from responsible sources
FSC® C006288

The internal pages of this catalogue are made with Freelife Cento by Fedrigoni, the eco-friendly 100% recycled paper produced with recovered waste and low $C0_2$ emissions.

All technical data, outputs, dimensions and weights stated in this catalogue are subject to change without prior notice. The illustrations are not binding.

Printed in June 2021.

PRODUCT RANGE OVERVIEW

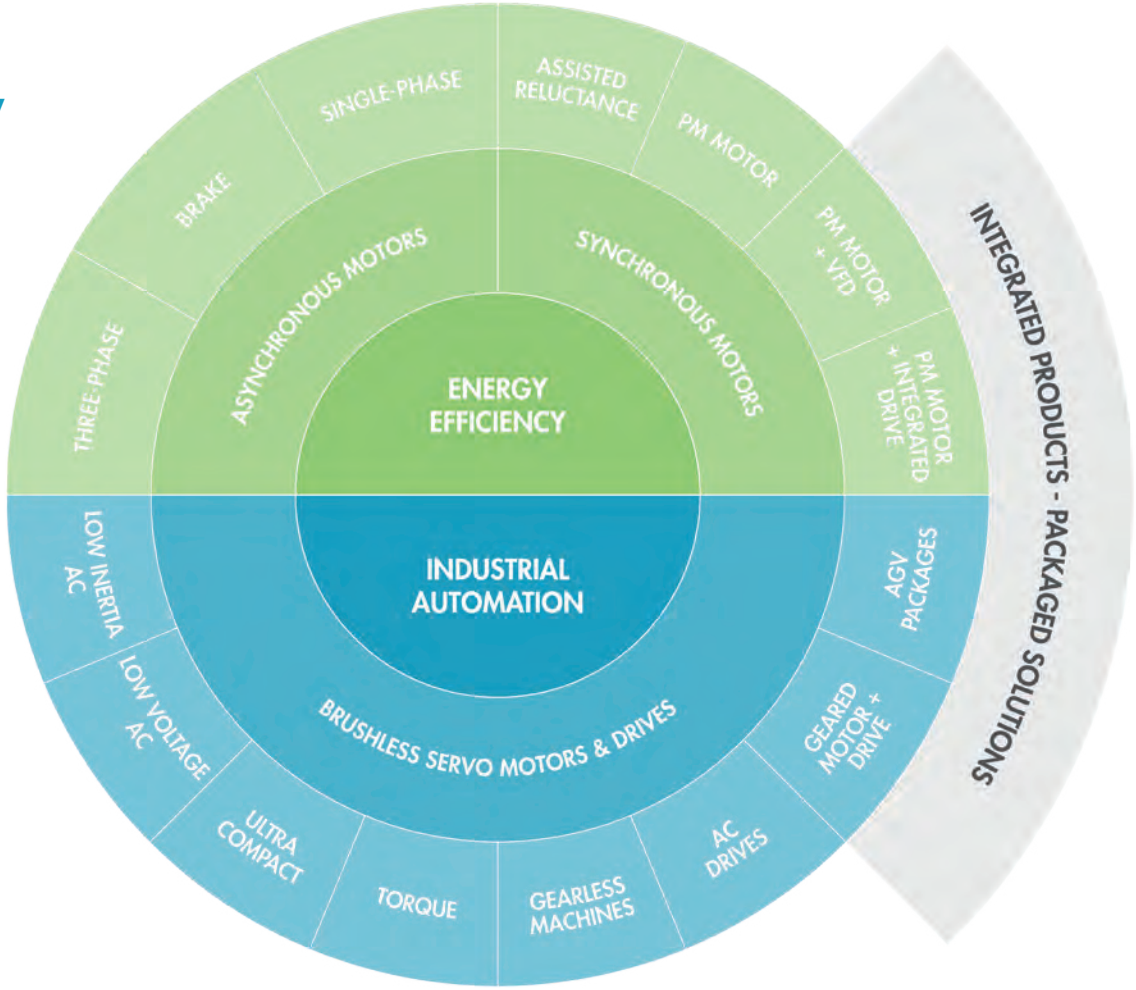

THREE-PHASE MOTORS

FIRST IN ENERGY SAVING

IE2 IE3 ENERGY c UL us

BRAKE MOTORS

RELIABILITY FIRST

IE2 IE3 ENERGY c UL us

PM MOTORS & DRIVES

THE IE5 SOLUTION

IE4 IE5 c UL us

APPLICATION RANGE OVERVIEW

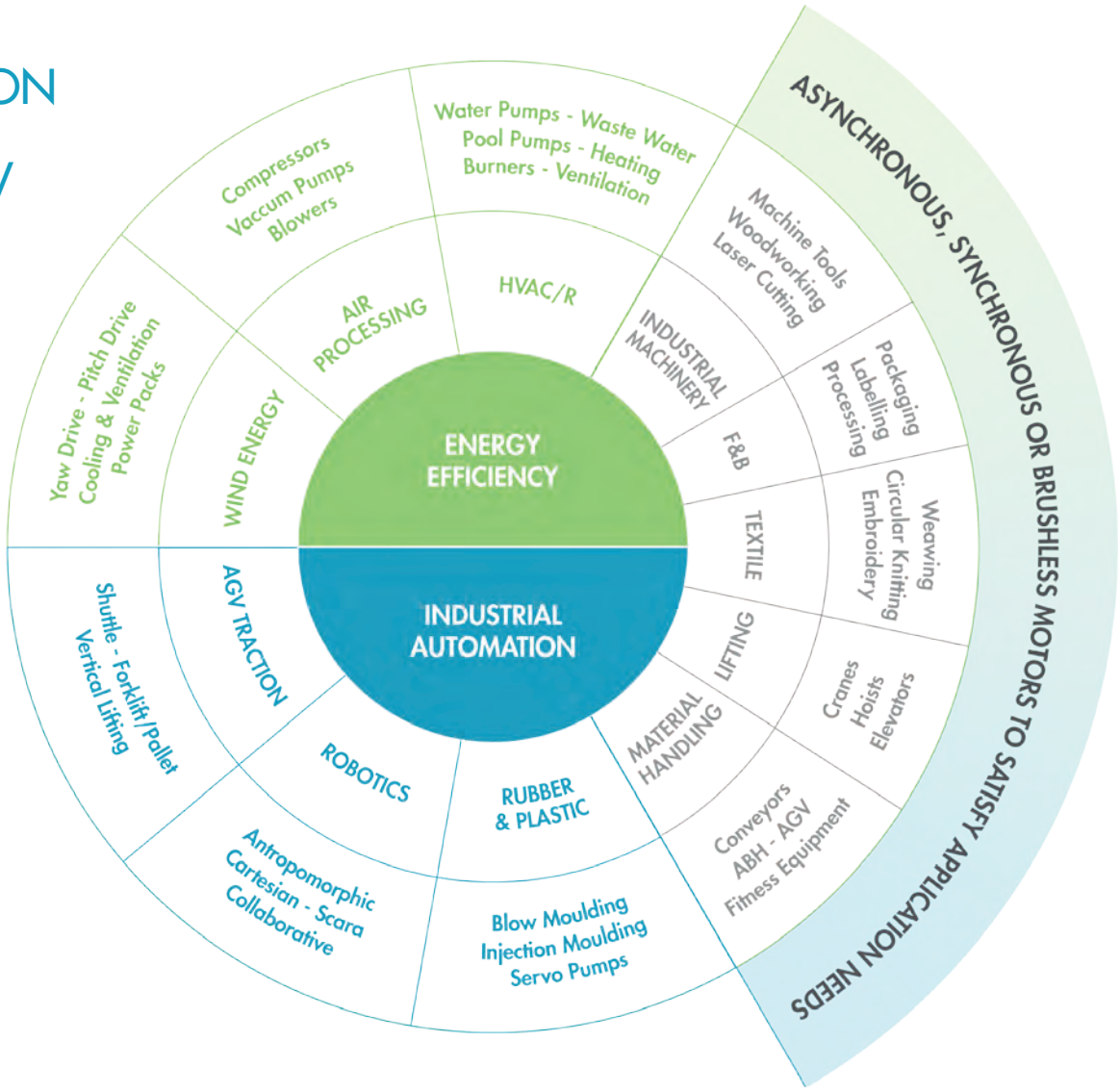

SERVO MOTORS & DRIVES

TOP PERFORMANCE, REDUCED DIMENSIONS

SMARTRIS

PACKAGED-DRIVE SYSTEM SOLUTIONS FOR AGV

LIFT RANGE

HIGHER & FASTER

Branches & Partners

Lafert GmbH
Wolf-Hirth-Straße 10
D-71034 Böblingen
Germany
Phone +49 175 550 4526
lafert.germany@lafert.com

Lafert Electric Motors Ltd.
Unit 17 Orion Way
Crewe, Cheshire CW1 6NG
United Kingdom
Phone +44 / (0) 1270 270 022
lafertuk@lafert.com

Lafert Moteurs S.A.S.
L'Isle d'Abeau Parc de Chesnes
75, rue de Malacombe
F - 38070 St. Quentin-Fallavier
France
Phone +33 / 474 95 41 01
info.lafertmoteurs@lafert.com

Lafert Motores Electricos, S.L.U.
Polígono Pignatelli, Nave 27
E - 50410 Cuarte de Huerva (Zaragoza)
Spain
Phone +34 / 976 503 822
info@lafert.es

Lafert N.A. (North America)
5620 Kennedy Road - Mississauga
Ontario L4Z 2A9
Canada
Phone +1 / 800/661 6413 - 905/629 1939
sales@lafertna.com

Lafert Electric Motors (Australia)
Factory 3, 117-123 Abbott Road,
Hallam - VIC 3803
Australia
Phone +61 / (0)3 95 46 75 15
info@lafertaust.com.au

Lafert Singapore Pte Ltd
48 Hillview Terrace #06-06
Hillview Building - Singapore 669269
Phone +65 / 67630400 - 67620400
info@lafert.com.sg

Lafert (Suzhou) Co., Ltd.
No.3 Industrial Plant Building Yue Xi Phase 3,
Tian E Dang Lu 2011, 215104 Wuzong
Economic Development Zone, Suzhou
China
Phone +86 / 512 6687 0618
info.lafertsuzhou@lafert.com

LAFERTSERVO

Lafert Servo Motors S.p.A.
E. Majorana, 2/a
I-30020 Noventa di Piave (Venezia), Italy
Tel. +39 / 0421 572 211
Fax +39 / 0421 225 858
info.servomotors@lafert.com

Headquarters:
Lafert S.p.A.
J. F. Kennedy, 43
I-30027 San Donà di Piave (Venezia), Italy
Tel. +39 / 0421 229 611
Fax +39 / 0421 222 908
info.lafert@lafert.com

www.lafert.com

MKTG-10-216/21 dnaitalia.com